# VGN-S53B/S63PZ/S73PB/S93PS/S93PSY/S93S
# VGN-S430P/S450FP/S460/S460F/S460P/S470P/S480/S480B/S480BH/S480P
# VGN-S4HP/S4HRP/S4M/S4VP/S4XP/S4XRP/S4Z
# VGN-S43LP/S44TP/S45C/S45CP/S45LP/S45SP/S46C/S46CP/S46GP/S46TP/S47LP/S47SP/S48CP/S48GP/S48TP/S49CP

# SERVICE MANUAL

**Ver. 7 2005K**

## Revision History

| Area | Model | Lineup | |
|---|---|---|---|
| Japanese | Japanese | VGN-S53B/S | |
| | | VGN-S63PZ/B | 3 [MA] |
| | | VGN-S73PB/B | |
| | | VGN-S93PS/S* | |
| | | VGN-S93PSY* | |
| | | VGN-S93S/S* | |
| American | US Canadian | VGN-S430P/S | |
| | | VGN-S460/B | |
| | | VGN-S460P/B | |
| | | VGN-S470P/S | |
| | | VGN-S480* | |
| | | VGN-S480B* | |
| | | VGN-S480BH* | 6 [MA] |
| | | VGN-S480P* | |
| | Latin | VGN-S450FP | 1 [MA] |
| | | VGN-S460F | 1 [MA] |
| European | AEP/UK | VGN-S4HP/B | 1 [MA] |
| | | VGN-S4HRP/B | 1 [MA] |
| | | VGN-S4M/S | 1 [MA] |
| | | VGN-S4VP/B | 1 [MA] |
| | | VGN-S4XP/B | 1 [MA] |
| | | VGN-S4XRP/B | 1 [MA] |
| | | VGN-S4Z/S | 5 [MA] |
| Asian/Oceania/ South Africa | International | VGN-S43LP/S | 5 [MA] |
| | | VGN-S44TP/B | 3 [MA] |
| | | VGN-S45LP/S | 5 [MA] |
| | | VGN-S45SP/S | 2 [MA] |
| | | VGN-S46GP/S | 2 [MA] |
| | | VGN-S46TP/S | 2 [MA] |
| | | VGN-S47LP/B | 5 [MA] |
| | | VGN-S47SP/B | 2 [MA] |
| | | VGN-S48GP/B | 2 [MA] |
| | | VGN-S48TP/B | 2 [MA] |
| | Chinese | VGN-S45C/S | 2 [MA] |
| | | VGN-S45CP/S | 2 [MA] |
| | | VGN-S46C/B | 2 [MA] |
| | | VGN-S46C/S | 2 [MA] |
| | | VGN-S46CP/B | 2 [MA] |
| | | VGN-S46CP/S | 2 [MA] |
| | | VGN-S48CP/B | 2 [MA] |
| | | VGN-S49CP/B | 2 [MA] |

* : CTO Model

9-876-417-07

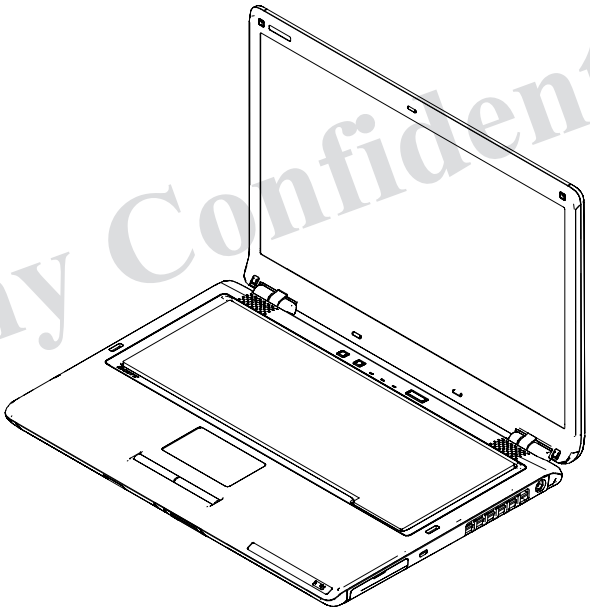

Sony Confidential

Bluetooth™

WiFi CERTIFIED

MEMORY STICK™

i.™ S400

VAIO

· Design and specifications are subject to change without notice.

· 本機の仕様および外観は、改良のため予告なく変更することがありますが、ご了承ください。

PERSONAL COMPUTER

SONY®

**Information in this document is subject to change without notice.**

Sony, VAIO and CLIE are trademarks or registered trademarks of Sony. Microsoft, Windows, Windows Media, Outlook, Bookshelf and other Microsoft products are trademarks or registered trademarks of Microsoft Corporation in the United States and other countries. The word Bluetooth and the Bluetooth logo are trademarks of Bluetooth SIG, Inc. AMD, AMD logo, AMD Duron and combinations there of, 3DNow!, are trademarks of Advanced Micro Devices, Inc. Intel Inside logo, Pentium and Celeron are trademarks or registered trademarks of Intel Corporation. Transmeta, the Transmeta logo, Crusoe Processor, the Crusoe logo and combinations there of are trademarks of Transmeta Corporation in the USA and other countries. Graffiti, HotSync, PalmModem, and Palm OS are registered trademarks, and the Hotsync logo and Palm are trademarks of Palm, Inc. or its subsidiaries. (M) and Motrola are trademarks of Motrora, Inc. Other Motrola products and services with (R) mark like Dragomball are the trademarks of Motrola, Inc.

All other names of systems, products and services in this manual are trademarks or registered trademarks of their respective owners. In this manual, the (TM) or (R) mark are not specified.

Caution Markings for Lithium/Ion Battery - The following or similar texts shall be provided on battery pack of equipment or in both the operating and the service instructions.

CAUTION: Danger of explosion if battery is incorrectly replaced. Replace only with the same or equivalent type recommended by the manufacturer. Discard used batteries according to the manufacturer's instructions.

CAUTION: The battery pack used in this device may present a fire or chemical burn hazard if mistreated. Do not disassemble, heat above 100°C (212°F) or incinerate. Dispose of used battery promptly. Keep away from children.

CAUTION: Changing the back up battery.

- Overcharging, short circuiting, reverse charging, multilati on or incineration of the cells must be avoided to prevent one or more of the following occurrences; release of toxic materials, release of hydrogen and/or oxygen gas, rise in surface temperature.
- If a cell has leaked or vented, it should be replaced immediately while avoiding to touch it without any protection.

# Service and Inspection Precautions

## 1. Obey precautionary markings and instructions

Labels and stamps on the cabinet, chassis, and components identify are as requiring special precautions. Be sure to observe these precautions, as well as all precautions listed in the operating manual and other associated documents.

## 2. Use designated parts only

The set's components possess important safety characteristics, such as noncombustibility and the ability to tolerate large voltages. Be sure that replacement parts possess the same safety characteristics as the originals. Also remember that the ⚠ mark, which appears in circuit diagrams and parts lists, denotes components that have particularly important safety functions; be extra sure to use only the designated components.

## 3. Always follow the original design when mounting parts and routing wires

The original layout includes various safety features, such as inclusion of insulating materials (tubes and tape) and the mounting of parts above the printer board. In addition, internal wiring has been routed and clamped so as to keep it away from hot or high-voltage parts. When mounting parts or routing wires, therefore, be sure to duplicate the original layout.

## 4. Inspect after completing service

After servicing, inspect to make sure that all screws, components, and wiring have been returned to their original condition. Also check the area around the repair location to ensure that repair work has caused no damage, and confirm safety.

## 5. When replacing chip components...

Never reuse components. Also remember that the negative side of tantalum capacitors is easily damaged by heat.

## 6. When handling flexible print boards...

- The temperature of the soldering-iron tip should be about 270°C.
- Do not apply the tip more than three times to the same pattern.
- Handle patterns with care; never apply force.

Caution: Remember that hard disk drives are easily damaged by vibration. Always handle with care.

**ATTENTION AU COMPOSANT AYANT RAPPORT À LA SÉCURITÉ!**

**LES COMPOSANTS IDENTIFÉS PAR UNE MARQUE ⚠ SUR LES DIAGRAMMES SCHÉMATIQUES ET LA LISTE DES PIÈCES SONT CRITIQUES POUR LA SÉCURITÉ DE FONCTIONNEMENT. NE REMPLACER CES COMPOSANTS QUE PAR DES PIÈSES SONY DONT LES NUMÉROS SONT DONNÉS DANSCE MANUEL OU DANS LES SUPPÉMENTS PUBLIÉS PAR SONY.**

## TABLE OF CONTENTS


Section Title Page

**CHAPTER 1. SPECIFICATIONS**
1-1. Specifications ..... 1-1
(to 1-2)

**CHAPTER 2. BLOCK DIAGRAM** ..... 2-1
(to 2-1)

**CHAPTER 3. FRAME HARNESS DIAGRAM** ..... 3-1
(to 3-1)

**CHAPTER 4. EXPLODED VIEWS AND PARTS LIST**
Palmrest
P-1 ..... 4-2
Main Board
M-1 ..... 4-4
Bottom
B-1 ..... 4-6
LCD
L-1. 13.3-inch WXGA (Brighter) – Made by TO – ..... 4-8
L-2. 13.3-inch WXGA (Brighter) – Made by SH – ..... 4-10
L-3. 13.3-inch WXGA ..... 4-12
Accessories
A-1 ..... 4-14
(to 4-14)

Section Title Page

**CHAPTER 5. OTHERS**
5-1. The Barcode Label ..... 5-1
5-2. Replacing the CPU ..... 5-2
(to 5-2)


History of the changes is shown as the "Revision History" at the end of this data.

変更履歴は,“Revision History”として,本データ末に記載してあります。

**Sony Confidential**

# CHAPTER 1.
# SPECIFICATIONS

## 1-1. Specifications

| | J | | | | | | AM | | |
|---|---|---|---|---|---|---|---|---|---|
| Model | VGN-S73PB/B | VGN-S53B/S | VGN-S93PS/S* | VGN-S93PSY* | VGN-S93S/S* | VGN-S63PZ/B | VGN-S460P/B | VGN-S470P/S | VGN-S460/B |
| CPU | PM/Do/750/1.86GHz | PM/Do/730/1.60GHz | CelM/Do/360/1.40GHz or PM/Do/730/1.60GHz or PM/Do/750/1.86GHz or PM/Do/770/2.13GHz | CelM/Do/360/1.40GHz or PM/Do/730/1.60GHz or PM/Do/750/1.86GHz or PM/Do/770/2.13GHz | CelM/Do/360/1.40GHz or PM/Do/730/1.60GHz or PM/Do/750/1.86GHz or PM/Do/770/2.13GHz | PM/Do/730/1.60GHz | PM/Do/740/1.73GHz | PM/Do/740/1.73GHz | PM/Do/740/1.73GHz |
| Chipset | 915PM | 915GM | 915GM or 915PM | 915GM or 915PM | 915GM or 915PM | 915GM | 915PM | 915PM | 915PM |
| Graphics | NV44M-V (TC32MB) | 915GM Integrated | 915GM Integrated or NV44M-V (TC32MB) | 915GM Integrated or NV44M-V (TC32MB) | 915GM Integrated or NV44M-V (TC32MB) | 915GM Integrated | NV44M-V (TC32MB) | NV44M-V (TC32MB) | NV44M-V (TC32MB) |
| LCD | 13.3/WXGA/BR | 13.3/WXGA/BR | 13.3/WXGA/BR or 13.3/WXGA | 13.3/WXGA/BR or 13.3/WXGA | 13.3/WXGA/BR or 13.3/WXGA | 13.3/WXGA | 13.3/WXGA/BR | 13.3/WXGA/BR | 13.3/WXGA/BR |
| HDD | 80GB | 60GB | 100GB or 40GB or 60GB or 80GB | 100GB or 40GB or 60GB or 80GB | 100GB or 40GB or 60GB or 80GB | 40GB | 80GB | 80GB | 80GB |
| Memory Std | 512MB(512MBx1) | 256MB(256MBx1) | 512MB(256MBx2) or 256MB(256MBx1) or 1GB(512MBx2) or 2GB(1GBx2) | 512MB(256MBx2) or 256MB(256MBx1) or 1GB(512MBx2) or 2GB(1GBx2) | 512MB(256MBx2) or 256MB(256MBx1) or 1GB(512MBx2) or 2GB(1GBx2) | 512MB(256MBx2) | 512MB(256MBx2) | 512MB(512MBx1) | 512MB(256MBx2) |
| Memory Max | 2GB | 2GB | 2GB | 2GB | 2GB | 2GB | 2GB | 2GB | 2GB |
| Optical | SuperMulti/9.5/x4/+DL | SuperMulti/9.5/x4/+DL | Combo/9.5/x24 or SuperMulti/9.5/x4/+DL | Combo/9.5/x24 or SuperMulti/9.5/x4/+DL | Combo/9.5/x24 or SuperMulti/9.5/x4/+DL | Combo/9.5/x24 | DVD+-RW/9.5/x4/+DL | DVD+-RW/9.5/x4/+DL | DVD+-RW/9.5/x4/+DL |
| Wireless LAN | 802.11b/g | 802.11b/g | 802.11b/g | 802.11b/g | 802.11b/g | 802.11b/g | 802.11b/g | 802.11b/g | 802.11b/g |
| AC adaptor | VGP-AC19V11 | VGP-AC19V11 | VGP-AC19V11 | VGP-AC19V11 | VGP-AC19V11 | VGP-AC19V11 | VGP-AC19V10 | VGP-AC19V10 | VGP-AC19V10 |
| Battery | VGP-BPS2 | VGP-BPS2 | VGP-BPS2 or VGP-BPL2 | VGP-BPS2 or VGP-BPL2 | VGP-BPS2 or VGP-BPL2 | VGP-BPS2 | VGP-BPS2 | VGP-BPS2 | VGP-BPS2 |
| Bluetooth | × | × | × | × | × | × | × | × | × |
| OS | XP Pro | XP Home | XP Pro | XP Pro | XP Home | XP Pro | XP Pro | XP Pro | XP Home |
| Color Variation | Black | Silver | Silver | Silver | Silver | Black | Black | Silver | Black |
| Office | 2003 Personal | 2003 Personal | 2003 Personal or 2003 Professional or None | 2003 Personal or 2003 Professional or None | 2003 Personal or 2003 Professional or None | None | None | None | None |
| Keyboard | Japanese | Japanese | English or Japanese | English or Japanese | English or Japanese | Japanese | English | English | English |

3 [MA]

| | AM | | | | | | | EU |
|---|---|---|---|---|---|---|---|---|
| Model | VGN-S480* | VGN-S480P* | VGN-S480B* | VGN-S480BH* | VGN-S430P/S | VGN-S460F | VGN-S450FP | VGN-S4XP/B |
| CPU | CelM/Do/360/1.40GHz or PM/Do/730/1.60GHz or PM/Do/740/1.73GHz or PM/Do/750/1.86GHz or PM/Do/760/2GHz or | CelM/Do/360/1.40GHz or PM/Do/730/1.60GHz or PM/Do/740/1.73GHz or PM/Do/750/1.86GHz or PM/Do/760/2GHz or PM/Do/770/2.13GHz | CelM/Do/360/1.40GHz or PM/Do/730/1.60GHz or PM/Do/740/1.73GHz or PM/Do/750/1.86GHz or PM/Do/760/2GHz or PM/Do/770/2.13GHz | CelM/Do/360/1.40GHz or PM/Do/730/1.60GHz or PM/Do/740/1.73GHz or PM/Do/750/1.86GHz or PM/Do/760/2GHz or PM/Do/770/2.13GHz | PM/Do/730/1.60GHz | PM/Do/740/1.73GHz | PM/Do/730/1.60GHz | PM/Do/760/2GHz |
| Chipset | 915GM or 915PM | 915GM or 915PM | 915GM or 915PM | 915GM or 915PM | 915GM | 915GM | 915GM | 915PM |
| Graphics | 915GM Integrated or NV44M-V (TC32MB) | 915GM Integrated or NV44M-V (TC32MB) | 915GM Integrated or NV44M-V (TC32MB) | 915GM Integrated or NV44M-V (TC32MB) | 915GM Integrated | 915GM Integrated | 915GM Integrated | NV44M-V (TC32MB) |
| LCD | 13.3/WXGA/BR or 13.3/WXGA | 13.3/WXGA/BR or 13.3/WXGA | 13.3/WXGA/BR or 13.3/WXGA | 13.3/WXGA/BR or 13.3/WXGA | 13.3/WXGA/BR | 13.3/WXGA/BR | 13.3/WXGA/BR | 13.3/WXGA/BR |
| HDD | 100GB or 40GB or 60GB or 80GB | 100GB or 40GB or 60GB or 80GB | 100GB or 40GB or 60GB or 80GB | 100GB or 40GB or 60GB or 80GB | 60GB | 60GB | 40GB | 100GB |
| Memory Std | 512MB(256MBx2) or 512MB(512MBx1) or 256MB(256MBx1) or 1GB(512MBx2) or 2GB(1GBx2) or 1GB(1GBx1) | 512MB(256MBx2) or 512MB(512MBx1) or 256MB(256MBx1) or 1GB(512MBx2) or 2GB(1GBx2) or 1GB(1GBx1) | 512MB(256MBx2) or 512MB(512MBx1) or 256MB(256MBx1) or 1GB(512MBx2) or 2GB(1GBx2) or 1GB(1GBx1) | 512MB(256MBx2) or 512MB(512MBx1) or 256MB(256MBx1) or 1GB(512MBx2) or 2GB(1GBx2) or 1GB(1GBx1) | 512MB(512MBx1) | 512MB(256MBx2) | 512MB(256MBx2) | 1GB(512MBx2) |
| Memory Max | 2GB | 2GB | 2GB | 2GB | 2GB | 2GB | 2GB | 2GB |
| Optical | Combo/9.5/x24 or DVD+-RW/9.5/x4/+DL | Combo/9.5/x24 or DVD+-RW/9.5/x4/+DL | Combo/9.5/x24 or DVD+-RW/9.5/x4/+DL | Combo/9.5/x24 or DVD+-RW/9.5/x4/+DL | Combo/9.5/x24 | DVD+-RW/9.5/x4/+DL | Combo/9.5/x24 | DVD+-RW/9.5/x4/+DL |
| Wireless LAN | 802.11a/b/g or 802.11b/g | 802.11a/b/g or 802.11b/g | 802.11a/b/g or 802.11b/g | 802.11a/b/g or 802.11b/g | 802.11b/g | 802.11b/g | 802.11b/g | 802.11b/g |
| AC adaptor | VGP-AC19V10 | VGP-AC19V10 | VGP-AC19V10 | VGP-AC19V10 | VGP-AC19V10 | VGP-AC19V10 | VGP-AC19V10 | VGP-AC19V10 |
| Battery | VGP-BPS2 or VGP-BPL2 | VGP-BPS2 or VGP-BPL2 | VGP-BPS2 or VGP-BPL2 | VGP-BPS2 or VGP-BPL2 | VGP-BPS2 | VGP-BPS2 | VGP-BPS2 | VGP-BPS2 |
| Bluetooth | O or × | O or × | O or × | O or × | × | × | × | O |
| OS | XP Home | XP Pro | XP Pro | XP Home | XP Pro | XP Home | XP Pro | XP Pro |
| Color Variation | Black | Black | Black | Black | Silver | Black | Black | Black |
| Office | CTO | CTO | CTO | CTO | None | None | None | None |
| Keyboard | English | English | English | English | English | Latin | Latin | Each Language |

6 [MA] 1 [MA] 1 [MA] 1 [MA]

・The trademarks of registered trademarks of above table, refer to page 2.
・The model that is accompanied by asterisk (*) is the CTO model.
・本表中の商標・登録商標については，2ページをご参照ください。
・機種名に（*）がつくものはCTOモデルです。



Sony Confidential

| | EU | | | | | | AO | |
|---|---|---|---|---|---|---|---|---|
| Model | VGN-S4VP/B | VGN-S4HP/B | VGN-S4HRP/B | VGN-S4M/S | VGN-S4XRP/B | VGN-S4Z/S | VGN-S49CP/B | VGN-S48CP/B |
| CPU | PM/Do/750/1.86GHz | PM/Do/740/1.73GHz | PM/Do/740/1.73GHz | PM/Do/730/1.60GHz | PM/Do/760/2GHz | PM/Do/740/1.73GHz | PM/Do/770/2.13GHz | PM/Do/750/1.86GHz |
| Chipset | 915PM | 915PM | 915PM | 915PM | 915PM | 915PM | 915PM | 915PM |
| Graphics | NV44M-V (TC32MB) | NV44M-V (TC32MB) | NV44M-V (TC32MB) | NV44M-V (TC32MB) | NV44M-V (TC32MB) | NV44M-V (TC32MB) | NV44M-V (TC32MB) | NV44M-V (TC32MB) |
| LCD | 13.3/WXGA/BR | 13.3/WXGA/BR | 13.3/WXGA/BR | 13.3/WXGA/BR | 13.3/WXGA/BR | 13.3/WXGA/BR | 13.3/WXGA/BR | 13.3/WXGA/BR |
| HDD | 80GB | 60GB | 60GB | 60GB | 100GB | 80GB | 60GB | 60GB |
| Memory Std | 1GB(512MBx2) | 512MB(512MBx1) | 512MB(512MBx1) | 512MB(256MBx2) | 1GB(512MBx2) | 512MB(256MBx2) | 512MB(512MBx1) | 512MB(512MBx1) |
| Memory Max | 2GB | 2GB | 2GB | 2GB | 2GB | 2GB | 2GB | 2GB |
| Optical | DVD+-RW/9.5/x4/+DL | DVD+-RW/9.5/x4/+DL | DVD+-RW/9.5/x4/+DL | DVD+-RW/9.5/x4/+DL | DVD+-RW/9.5/x4/+DL | DVD+-RW/9.5/x4/+DL | DVD+-RW/9.5/x4/+DL | DVD+-RW/9.5/x4/+DL |
| Wireless LAN | 802.11b/g | 802.11b/g | 802.11b/g | 802.11b/g | 802.11b/g | 802.11b/g | 802.11b/g | 802.11b/g |
| AC adaptor | VGP-AC19V10 | VGP-AC19V10 | VGP-AC19V12 | VGP-AC19V10 | VGP-AC19V12 | VGP-AC19V10 | VGP-AC19V10 | VGP-AC19V10 |
| Battery | VGP-BPS2 | VGP-BPS2 | VGP-BPS2 | VGP-BPS2 | VGP-BPS2 | VGP-BPS2 | VGP-BPS2 | VGP-BPS2 |
| Bluetooth | ○ | ○ | × | × | × | × | ○ | ○ |
| OS | XP Pro | XP Pro | XP Pro | XP Home | XP Pro | XP Home | XP Pro | XP Pro |
| Color Variation | Black | Black | Black | Silver | Black | Silver | Black | Black |
| Office | None | None | None | None | None | None | None | None |
| Keyboard | Each Language | Each Language | Russian | Each Language | Russian | English | English | English |
| | 1 [MA] | 1 [MA] | 1 [MA] | 1 [MA] | 1 [MA] | 5 [MA] | 2 [MA] | 2 [MA] |

| | AO | | | | | | | |
|---|---|---|---|---|---|---|---|---|
| Model | VGN-S46CP/B | VGN-S46CP/S | VGN-S46C/B | VGN-S46C/S | VGN-S45CP/S | VGN-S45C/S | VGN-S48GP/B | VGN-S48TP/B |
| CPU | PM/Do/740/1.73GHz | PM/Do/740/1.73GHz | PM/Do/740/1.73GHz | PM/Do/740/1.73GHz | PM/Do/730/1.60GHz | PM/Do/730/1.60GHz | PM/Do/760/2GHz | PM/Do/760/2GHz |
| Chipset | 915PM | 915PM | 915PM | 915PM | 915GM | 915GM | 915PM | 915PM |
| Graphics | NV44M-V (TC32MB) | NV44M-V (TC32MB) | NV44M-V (TC32MB) | NV44M-V (TC32MB) | 915GM Integrated | 915GM Integrated | NV44M-V (TC32MB) | NV44M-V (TC32MB) |
| LCD | 13.3/WXGA/BR | 13.3/WXGA/BR | 13.3/WXGA/BR | 13.3/WXGA/BR | 13.3/WXGA/BR | 13.3/WXGA/BR | 13.3/WXGA/BR | 13.3/WXGA/BR |
| HDD | 40GB | 40GB | 40GB | 40GB | 40GB | 40GB | 60GB | 60GB |
| Memory Std | 512MB(512MBx1) | 512MB(512MBx1) | 512MB(512MBx1) | 512MB(512MBx1) | 256MB(256MBx1) | 256MB(256MBx1) | 512MB(512MBx1) | 512MB(512MBx1) |
| Memory Max | 2GB | 2GB | 2GB | 2GB | 2GB | 2GB | 2GB | 2GB |
| Optical | Combo/9.5/x24 | Combo/9.5/x24 | Combo/9.5/x24 | Combo/9.5/x24 | Combo/9.5/x24 | Combo/9.5/x24 | DVD+-RW/9.5/x4/+DL | DVD+-RW/9.5/x4/+DL |
| Wireless LAN | 802.11b/g | 802.11b/g | 802.11b/g | 802.11b/g | 802.11b/g | 802.11b/g | 802.11b/g | 802.11b/g |
| AC adaptor | VGP-AC19V10 | VGP-AC19V10 | VGP-AC19V10 | VGP-AC19V10 | VGP-AC19V10 | VGP-AC19V10 | VGP-AC19V10 | VGP-AC19V10 |
| Battery | VGP-BPS2 | VGP-BPS2 | VGP-BPS2 | VGP-BPS2 | VGP-BPS2 | VGP-BPS2 | VGP-BPS2 | VGP-BPS2 |
| Bluetooth | ○ | ○ | ○ | ○ | ○ | ○ | ○ | ○ |
| OS | XP Pro | XP Pro | XP Home | XP Home | XP Pro | XP Home | XP Pro | XP Pro |
| Color Variation | Black | Silver | Black | Silver | Silver | Silver | Black | Black |
| Office | None | None | None | None | None | None | None | None |
| Keyboard | English | English | English | English | English | English | English | Taiwan |
| | 2 [MA] | 2 [MA] | 2 [MA] | 2 [MA] | 2 [MA] | 2 [MA] | 2 [MA] | 2 [MA] |

| | AO | | | | | | | |
|---|---|---|---|---|---|---|---|---|
| Model | VGN-S47SP/B | VGN-S47LP/B | VGN-S46GP/S | VGN-S46TP/S | VGN-S45SP/S | VGN-S45LP/S | VGN-S44TP/B | VGN-S43LP/S |
| CPU | PM/Do/760/2GHz | PM/Do/760/2GHz | PM/Do/740/1.73GHz | PM/Do/740/1.73GHz | PM/Do/740/1.73GHz | PM/Do/740/1.73GHz | PM/Do/740/1.73GHz | PM/Do/740/1.73GHz |
| Chipset | 915PM | 915PM | 915PM | 915PM | 915PM | 915PM | 915PM | 915PM |
| Graphics | NV44M-V (TC32MB) | NV44M-V (TC32MB) | NV44M-V (TC32MB) | NV44M-V (TC32MB) | NV44M-V (TC32MB) | NV44M-V (TC32MB) | NV44M-V (TC32MB) | NV44M-V (TC32MB) |
| LCD | 13.3/WXGA/BR | 13.3/WXGA/BR | 13.3/WXGA/BR | 13.3/WXGA/BR | 13.3/WXGA/BR | 13.3/WXGA/BR | 13.3/WXGA/BR | 13.3/WXGA/BR |
| HDD | 60GB | 60GB | 60GB | 60GB | 60GB | 60GB | 40GB | 40GB |
| Memory Std | 512MB(512MBx1) | 512MB(512MBx1) | 512MB(512MBx1) | 512MB(512MBx1) | 512MB(512MBx1) | 512MB(512MBx1) | 512MB(512MBx1) | 512MB(512MBx1) |
| Memory Max | 2GB | 2GB | 2GB | 2GB | 2GB | 2GB | 2GB | 2GB |
| Optical | DVD+-RW/9.5/x4/+DL | DVD+-RW/9.5/x4/+DL | DVD+-RW/9.5/x4/+DL | DVD+-RW/9.5/x4/+DL | DVD+-RW/9.5/x4/+DL | DVD+-RW/9.5/x4/+DL | Combo/9.5/x24 | Combo/9.5/x24 |
| Wireless LAN | 802.11b/g | 802.11b/g | 802.11b/g | 802.11b/g | 802.11b/g | 802.11b/g | 802.11b/g | 802.11b/g |
| AC adaptor | VGP-AC19V10 | VGP-AC19V10 | VGP-AC19V10 | VGP-AC19V10 | VGP-AC19V10 | VGP-AC19V10 | VGP-AC19V10 | VGP-AC19V10 |
| Battery | VGP-BPS2 | VGP-BPS2 | VGP-BPS2 | VGP-BPS2 | VGP-BPS2 | VGP-BPS2 | VGP-BPS2 | VGP-BPS2 |
| Bluetooth | × | × | ○ | ○ | × | × | ○ | × |
| OS | XP Pro | XP Pro | XP Pro | XP Pro | XP Pro | XP Pro | XP Pro | XP Pro |
| Color Variation | Black | Black | Silver | Silver | Silver | Silver | Black | Silver |
| Office | None | None | None | None | None | None | None | None |
| Keyboard | Thai | Korean | English | Taiwan | Thai | Korean | Taiwan | Korean |
| | 2 [MA] | 5 [MA] | 2 [MA] | 2 [MA] | 2 [MA] | 5 [MA] | 3 [MA] | 5 [MA] |

・The trademarks of registered trademarks of above table, refer to page 2.

・本表中の商標・登録商標については，2ページをご参照ください。

1 [MA]

**Sony Confidential**

# CHAPTER 2.
# BLOCK DIAGRAM

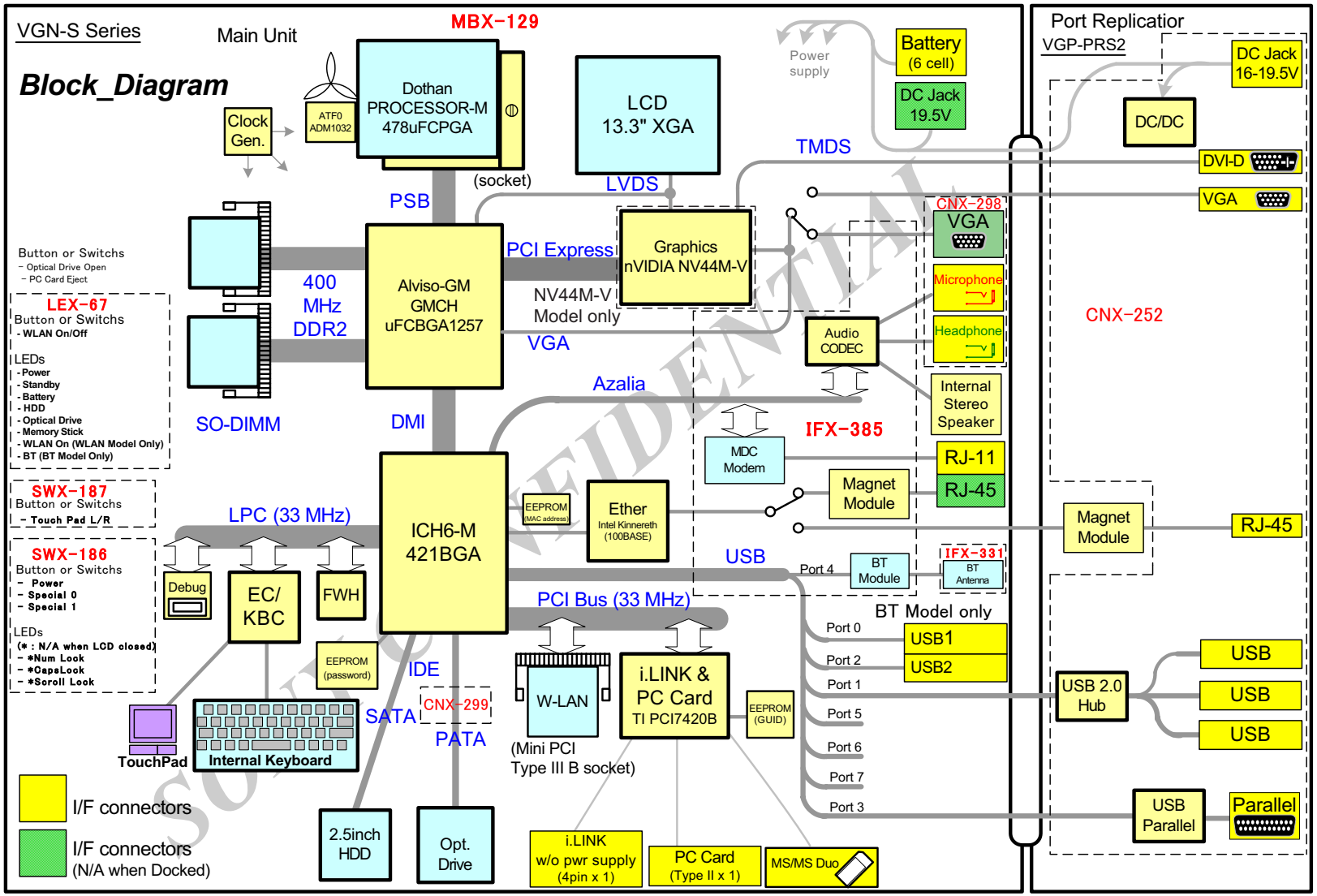


SONY CONFIDENTIAL

Sony Confidential

# CHAPTER 3.
# FRAME HARNESS DIAGRAM

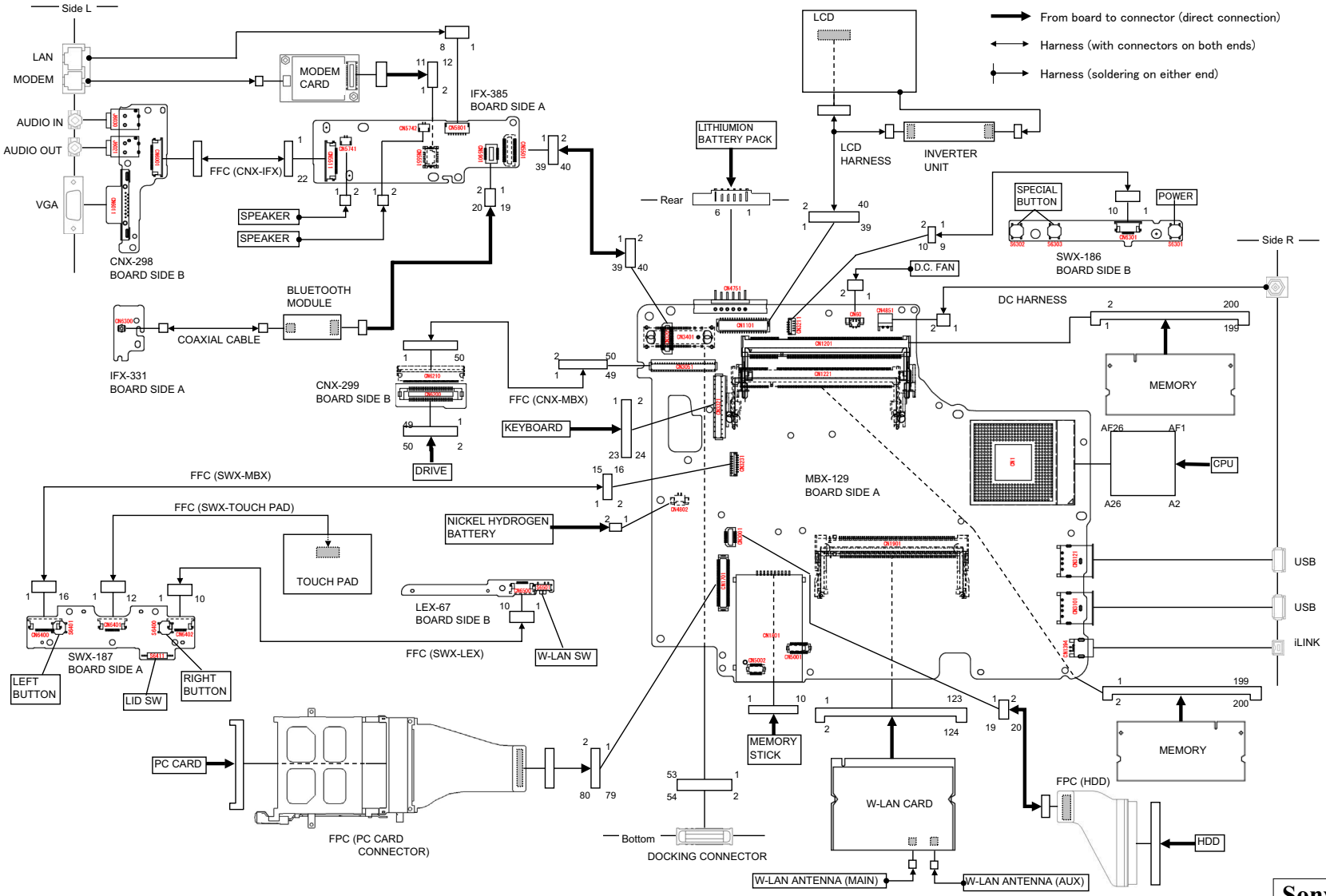


**Sony Confidential**

VGN-S53B/S63PZ/S73PB/S93PS/S93PSY/S93S (J)
VGN-S430P/S450FP/S460/S460F/S460P/S470P/S480/S480B/S480BH/S480P (AM)
VGN-S4HP/S4HRP/S4M/S4VP/S4XP/S4XRP/S4Z (EU)
VGN-S43LP/S44TP/S45C/S45CP/S45LP/S45SP/S46C/S46CP/S46GP/S46TP/S47LP/S47SP/S48CP/S48GP/S48TP/S49CP (AO)


(END)

# CHAPTER 4.
# EXPLODED VIEWS AND PARTS LIST

- The parts list is compiled by blocks of a palmrest and bottom etc. The sections of the parts list are different depending on the model. Please refer to list of contents shown in the below.

- 分解図と部品表は，パームレスト，ボトムなどのブロックごとに分かれています。機種によって部品表のセクションが異なりますので，詳細は右下の一覧表を参照してください。

Section Page


**Palmrest**
P-1 ..... 4-2
**Main Board**
M-1 ..... 4-4
**Bottom**
B-1 ..... 4-6
**LCD**
L-1. 13.3-inch WXGA (Brighter) – Made by TO – ..... 4-8
L-2. 13.3-inch WXGA (Brighter) – Made by SH – ..... 4-10
L-3. 13.3-inch WXGA ..... 4-12
**Accessory**
A-1 ..... 4-14


***NOTE:***

- Items marked "*" are not stocked since they are seldom required for routine service. Some delay should be anticipated when ordering these items.
- The mechanical parts with no reference number in the exploded views are not supplied.
- When two or more parts are shown, use the part described first as the main part.
- The parts marked " $ " are the High Value Modules (HVM).
- The parts marked " # " are the parts on which barcode label is attached. For the barcode label, refer to CHAPTER 5.
- The parts marked "&" are the "Customer Replacable Parts (CRP)" that can be replaced by Field Customer Support. Especially the parts with the <&> mark require the special attention to use them. Here fore, check first whether the desired part is one of the targetted parts of the Customer Replaceable Parts (CRP), or the non-targetted parts by referring to the exploded view.

【使用上の注意】

- *印の部品は常備在庫しておりません。
- 図面番号のない部品は供給しません。
- 併記部品の場合，上部記載部品をメイン部品として使用してください。
- 部品名称の前に$印のついた部品は，High Value Module（HVM）です。
- 商品名称の前に#印のついた部品は，バーコードラベル貼付部品です。
  バーコードラベルについてはCHAPTER 5を参照してください。
- 部品名称の前に&印のついた部品は，お客様窓口などでも交換可能なCustomer Replacable Part（CRP）です。
  特に<&>のついた部品は，使い分けが必要な部品ですので，分解図でCustomer Replacable Parts対象部品か，対象外部品かを必ず御確認ください。

The components identified by mark ⚠ or dotted line with mark ⚠ are critical for safety. Replace only with part number specified.

Les composants identifiés par une marque ⚠ sont critiques pour la sécurité. Ne les remplacer que par une pièce portant le numéro spécifié.

⚠印の部品，または⚠印付きの点線で囲まれた部品は，安全性を維持するために重要な部品です。従って交換時は，必ず指定の部品を使用して下さい。

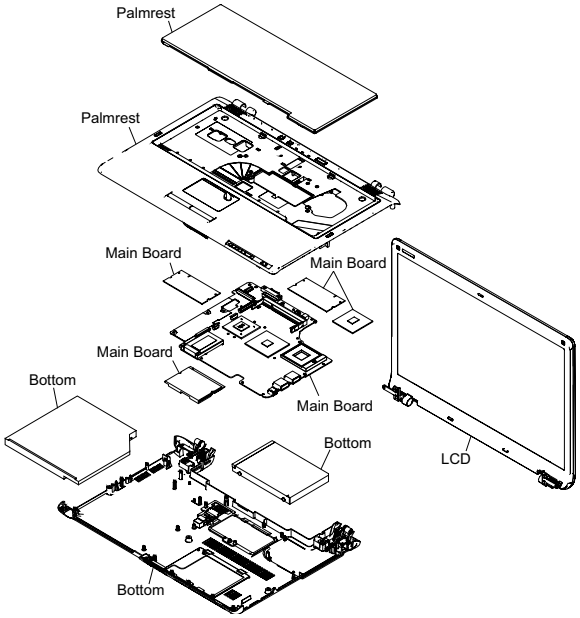


| | | | Palmrest | Main Board | Bottom | LCD | Accessory |
|---|---|---|---|---|---|---|---|
| | J | S73PB/B | P-1 | M-1 | B-1 | L-1 | A-1 |
| | J | S53B/S | P-1 | M-1 | B-1 | L-1 | A-1 |
| | J | S93PS/S* | P-1 | M-1 | B-1 | L-1, 3 | A-1 |
| | J | S93PSY* | P-1 | M-1 | B-1 | L-1, 3 | A-1 |
| | J | S93S/S* | P-1 | M-1 | B-1 | L-1, 3 | A-1 |
| ⚠3 [MA] | J | S63PZ/B | P-1 | M-1 | B-1 | L-3 | A-1 |
| | AM | S460P/B | P-1 | M-1 | B-1 | L-1 | A-1 |
| | AM | S470P/S | P-1 | M-1 | B-1 | L-1 | A-1 |
| | AM | S460/B | P-1 | M-1 | B-1 | L-1 | A-1 |
| | AM | S480* | P-1 | M-1 | B-1 | L-2, 3 | A-1 |
| | AM | S480P* | P-1 | M-1 | B-1 | L-2, 3 | A-1 |
| | AM | S480B* | P-1 | M-1 | B-1 | L-2, 3 | A-1 |
| ⚠6 [MA] | AM | S480BH* | P-1 | M-1 | B-1 | L-1, 3 | A-1 |
| | AM | S430P/S | P-1 | M-1 | B-1 | L-2 | A-1 |
| ⚠1 [MA] | AM | S460F | P-1 | M-1 | B-1 | L-2 | A-1 |
| ⚠1 [MA] | AM | S450FP | P-1 | M-1 | B-1 | L-2 | A-1 |
| ⚠1 [MA] | EU | S4XP/B | P-1 | M-1 | B-1 | L-2 | A-1 |
| ⚠1 [MA] | EU | S4VP/B | P-1 | M-1 | B-1 | L-2 | A-1 |
| ⚠1 [MA] | EU | S4HP/B | P-1 | M-1 | B-1 | L-2 | A-1 |
| ⚠1 [MA] | EU | S4HRP/B | P-1 | M-1 | B-1 | L-2 | A-1 |
| ⚠1 [MA] | EU | S4M/S | P-1 | M-1 | B-1 | L-2 | A-1 |
| ⚠1 [MA] | EU | S4XRP/B | P-1 | M-1 | B-1 | L-2 | A-1 |
| ⚠5 [MA] | EU | S4Z/S | P-1 | M-1 | B-1 | L-2 | A-1 |
| ⚠2 [MA] | AO | S49CP/B | P-1 | M-1 | B-1 | L-1 | A-1 |
| ⚠2 [MA] | AO | S48CP/B | P-1 | M-1 | B-1 | L-1 | A-1 |
| ⚠2 [MA] | AO | S46CP/B | P-1 | M-1 | B-1 | L-1 | A-1 |
| ⚠2 [MA] | AO | S46CP/S | P-1 | M-1 | B-1 | L-1 | A-1 |
| ⚠2 [MA] | AO | S46C/B | P-1 | M-1 | B-1 | L-1 | A-1 |
| ⚠2 [MA] | AO | S46C/S | P-1 | M-1 | B-1 | L-1 | A-1 |
| ⚠2 [MA] | AO | S45CP/S | P-1 | M-1 | B-1 | L-1 | A-1 |
| ⚠2 [MA] | AO | S45C/S | P-1 | M-1 | B-1 | L-1 | A-1 |
| ⚠2 [MA] | AO | S48GP/B | P-1 | M-1 | B-1 | L-1 | A-1 |
| ⚠2 [MA] | AO | S48TP/B | P-1 | M-1 | B-1 | L-1 | A-1 |
| ⚠2 [MA] | AO | S47SP/B | P-1 | M-1 | B-1 | L-2 | A-1 |
| ⚠5 [MA] | AO | S47LP/B | P-1 | M-1 | B-1 | L-1 | A-1 |
| ⚠2 [MA] | AO | S46GP/S | P-1 | M-1 | B-1 | L-1 | A-1 |
| ⚠2 [MA] | AO | S46TP/S | P-1 | M-1 | B-1 | L-1 | A-1 |
| ⚠2 [MA] | AO | S45SP/S | P-1 | M-1 | B-1 | L-2 | A-1 |
| ⚠5 [MA] | AO | S45LP/S | P-1 | M-1 | B-1 | L-1 | A-1 |
| ⚠3 [MA] | AO | S44TP/B | P-1 | M-1 | B-1 | L-1 | A-1 |
| ⚠5 [MA] | AO | S43LP/S | P-1 | M-1 | B-1 | L-1 | A-1 |

* : CTO model

**Sony Confidential**

VGN-S53B/S63PZ/S73PB/S93PS/S93PSY/S93S (J)
VGN-S430P/S450FP/S460/S460F/S460P/S470P/S480/S480B/S480BH/S480P (AM)
VGN-S4HP/S4HRP/S4M/S4VP/S4XP/S4XRP/S4Z (EU)
VGN-S43LP/S44TP/S45C/S45CP/S45LP/S45SP/S46C/S46CP/S46GP/S46TP/S47LP/S47SP/S48CP/S48GP/S48TP/S49CP (AO)

# P-1. Palmrest

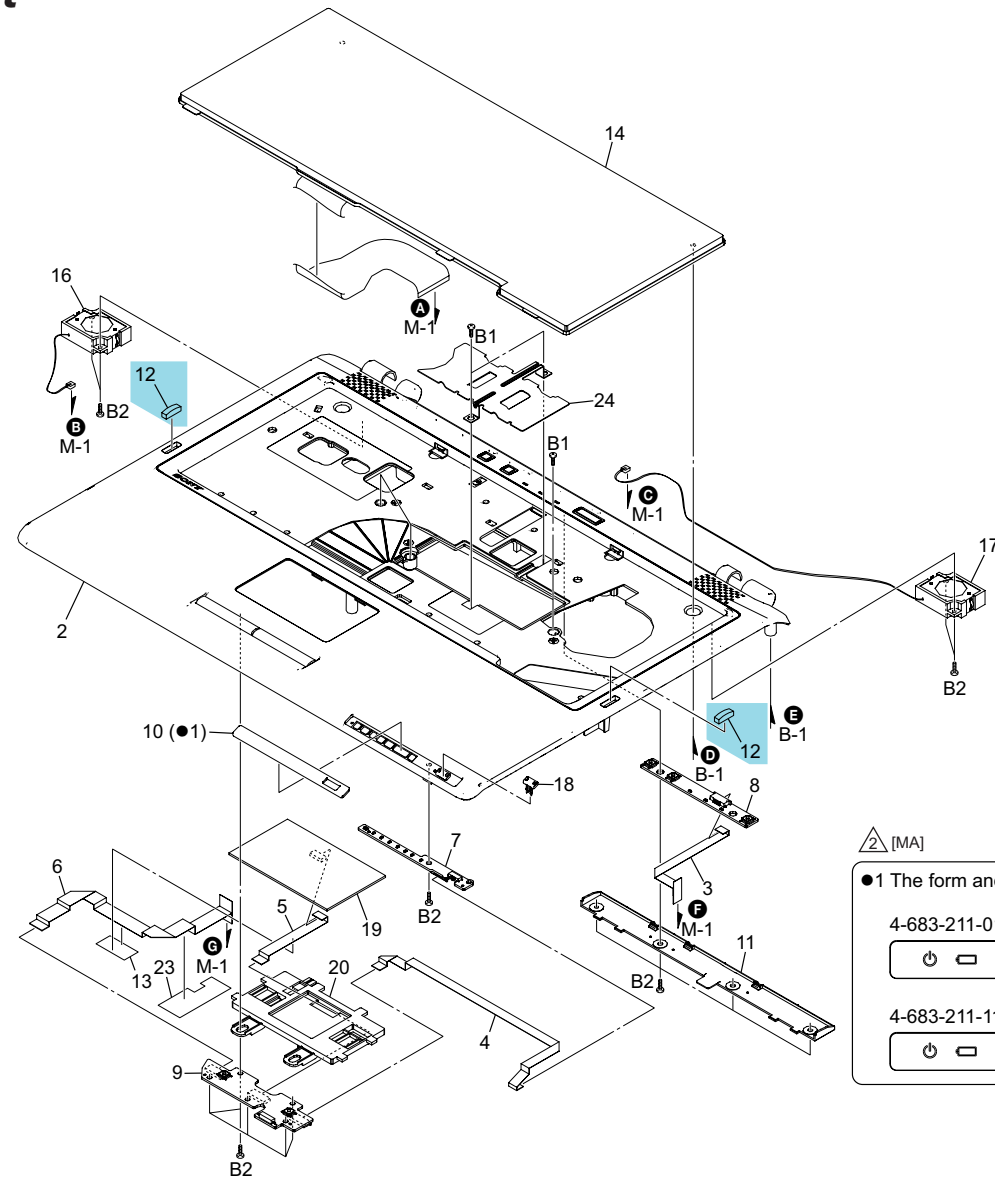


2 [MA]

●1 The form and the printing of LED cover differs for every part number.

4-683-211-01/4-683-211-21 COVER LED

4-683-211-11/4-683-211-31 COVER LED

Sony Confidential

# *P-1. Palmrest*

| Ref. No. | Part No. | | Description |
|---|---|---|---|
| 3 | 1-830-252-12 | | CABLE, FLEXIBLE FLAT (10PIN) |
| 4 | 1-830-252-41 | | CABLE, FLEXIBLE FLAT (10PIN) |
| 5 | 1-829-195-11 | | CABLE, FLEXIBLE FLAT (12PIN) |
| 6 | 1-830-252-21 | | CABLE, FLEXIBLE FLAT (16PIN) |
| 7 | A-1124-115-A | $ | COMPLETE PWB LEX67 (S) |
| 8 | ~~A-1124-117-A~~ | $ | COMPLETE PWB SWX186 (S) |
| 9 | ~~A-1124-116-A~~ | $ | COMPLETE PWB SWX187 (S) |
| 11 | 4-683-212-01 | | COVER PALM |
| 13 | 4-662-881-02 | | CUSHION, KEY BOARD |
| 16 | 1-825-846-31 | | SPEAKER WITH BOX (L) |
| 17 | 1-825-846-41 | | SPEAKER WITH BOX (R) |
| 18 | 4-683-214-02 | | SWITCH WL |
| 20 | X-4626-773-2 | | ASSY HOLDER TP |
| 23 | 2-592-270-01 | | SHEET FFC |
| 24 | 2-548-550-01 | | SHIELD MEMORY PLATE |
| B1 | 4-672-834-71 | | SCREW, +B EG GRIP |
| B2 | 4-676-936-01 | | +SCREW,O2 +SPECIAL HEAD SELF S |

△4 [COR] A-1124-116-A (→ Ref. 8)

△4 [COR] A-1124-117-A (→ Ref. 9)

| Mark | Ref.No. | Part No. | | Description | J: S73PB/B | J: S53B/S | J: S93PS/S* | J: S93PSY* | J: S93S/S* | J: S63PZ/B | AM: S460P/B | AM: S470P/S | AM: S460/B | AM: S480* | AM: S480P* | AM: S480B* | AM: S480BH* | AM: S430P/S | AM: S460F | AM: S450FP |
|---|---|---|---|---|---|---|---|---|---|---|---|---|---|---|---|---|---|---|---|---|
| | 2 | X-2025-555-2 | | ASSY PALMREST | ● | | | | | ● | ● | | ● | ● | ● | ● | ● | | ● | ● |
| | | X-2048-845-2 | | ASSY PALMREST(SILVER) | | ● | ● | ● | ● | | | ● | | | | | | ● | | |
| | 10 | 4-683-211-31 | | COVER LED | | ● | ● | ● | ● | | | ● | | | | | | ● | | |
| | | 4-683-211-01 | | COVER LED | | | | | | | | | | ● | ● | ● | ● | | | |
| | | 4-683-211-11 | | COVER LED | ● | | | | | ● | ● | | ● | ● | ● | ● | ● | | ● | ● |
| △2 [MA] | | 4-683-211-21 | | COVER LED | | | | | | | | | | | | | | | | |
| | 12 | 4-654-440-22 | & | CUSHION (PALM) | ● | | | | | ● | ● | | ● | ● | ● | ● | ● | | ● | ● |
| | | 4-654-440-41 | & | CUSHION (PALM) | | ● | ● | ● | ● | | | ● | | | | | | ● | | |
| △1 [MA] | 14 | 1-479-169-31 | # | (Swiss)...KEYBOARD UNIT(CH) | | | | | | | | | | | | | | | | |
| △1 [MA] | | 1-479-169-21 | # | (German)...KEYBOARD UNIT(DE) | | | | | | | | | | | | | | | | |
| △1 [MA] | | 1-479-169-61 | # | (Spanish)...KEYBOARD UNIT(ES) | | | | | | | | | | | | | | | | |
| △1 [MA] | | 1-479-169-41 | # | (French/Belgium)...KEYBOARD UNIT(FR) | | | | | | | | | | | | | | | | |
| △1 [MA] | | 1-479-169-11 | # | (UK/Dutch)...KEYBOARD UNIT(GB) | | | | | | | | | | | | | | | | |
| △1 [MA] | | 1-479-169-51 | # | (Italian)...KEYBOARD UNIT(IT) | | | | | | | | | | | | | | | | |
| | | 1-479-166-11 | # | KEYBOARD UNIT(JP) | ● | ● | ● | ● | ● | ● | | | | | | | | | | |
| △5 [MA] | | 1-479-166-31 | # | KEYBOARD UNIT(KR) | | | | | | | | | | | | | | | | |
| △1 [MA] | | 1-479-169-91 | # | (Portugal)...KEYBOARD UNIT(PT) | | | | | | | | | | | | | | | | |
| △1 [MA] | | 1-479-169-81 | # | (Swedish)...KEYBOARD UNIT(SE) | | | | | | | | | | | | | | | | |
| △2 [MA] | | 1-479-166-41 | # | KEYBOARD UNIT(TH) | | | | | | | | | | | | | | | | |
| △2 [MA] | | 1-479-166-51 | # | KEYBOARD UNIT(TW) | | | | | | | | | | | | | | | | |
| | | 1-479-166-21 | # | KEYBOARD UNIT(US) | | | ● | ● | ● | | ● | ● | ● | ● | ● | ● | ● | ● | | |
| △1 [MA] | | 1-479-169-71 | # | KEYBOARD UNIT (LA) | | | | | | | | | | | | | | | ● | ● |
| △1 [MA] | | 1-479-166-61 | # | (Russian)...KEYBOARD UNIT (RU) | | | | | | | | | | | | | | | | |
| | 19 | 1-796-958-11 | | TOUCH PAD | ● | | | | | ● | ● | | ● | ● | ● | ● | ● | | ● | ● |
| | | 1-796-958-31 | | TOUCH PAD | | ● | ● | ● | ● | | | ● | | | | | | ● | | |
| | | | | | | | | | | △3 [MA] | | | | | | | △6 [MA] | | | |

| Part No. | EU: S4XP/B | EU: S4VP/B | EU: S4HP/B | EU: S4HRP/B | EU: S4M/S | EU: S4XRP/B | EU: S4Z/S | AO: S49CP/B | AO: S48CP/B | AO: S46CP/B | AO: S46CP/S | AO: S46C/B | AO: S46C/S | AO: S45CP/S | AO: S45C/S | AO: S48GP/B | AO: S48TP/B | AO: S47SP/B | AO: S47LP/B | AO: S46GP/S | AO: S46TP/S | AO: S45SP/S | AO: S45LP/S | AO: S44TP/B | AO: S43LP/S |
|---|---|---|---|---|---|---|---|---|---|---|---|---|---|---|---|---|---|---|---|---|---|---|---|---|---|
| X-2025-555-2 | ● | ● | ● | ● | | ● | | ● | ● | ● | | ● | | | | ● | ● | ● | ● | | | | | ● | |
| X-2048-845-2 | | | | | ● | | ● | | | | ● | | ● | ● | ● | | | | | ● | ● | ● | ● | | ● |
| 4-683-211-31 | | | | | ● | | ● | | | | | | | | | | | | | | | ● | ● | | ● |
| 4-683-211-01 | ● | ● | ● | | | | | ● | ● | ● | | ● | | | | ● | ● | | | | | | | ● | |
| 4-683-211-11 | | | | ● | | ● | | | | | | | | | | | | ● | ● | | | | | | |
| 4-683-211-21 | | | | | | | | | | | ● | | ● | ● | ● | | | | | ● | ● | | | | |
| 4-654-440-22 | ● | ● | ● | ● | | ● | | ● | ● | ● | | ● | | | | ● | ● | ● | ● | | | | | ● | |
| 4-654-440-41 | | | | | ● | | ● | | | | ● | | ● | ● | ● | | | | | ● | ● | ● | ● | | ● |
| 1-479-169-31 | ● | | ● | | | | | | | | | | | | | | | | | | | | | | |
| 1-479-169-21 | ● | ● | ● | | ● | | | | | | | | | | | | | | | | | | | | |
| 1-479-169-61 | ● | | ● | | ● | | | | | | | | | | | | | | | | | | | | |
| 1-479-169-41 | ● | ● | ● | | ● | | | | | | | | | | | | | | | | | | | | |
| 1-479-169-11 | ● | ● | ● | | ● | | ● | | | | | | | | | | | | | | | | | | |
| 1-479-169-51 | ● | ● | ● | | ● | | | | | | | | | | | | | | | | | | | | |
| 1-479-166-11 | | | | | | | | | | | | | | | | | | | | | | | | | |
| 1-479-166-31 | | | | | | | | | | | | | | | | | | | ● | | | | ● | | ● |
| 1-479-169-91 | | | ● | | | | | | | | | | | | | | | | | | | | | | |
| 1-479-169-81 | | | ● | | | | | | | | | | | | | | | | | | | | | | |
| 1-479-166-41 | | | | | | | | | | | | | | | | | | ● | | | | ● | | | |
| 1-479-166-51 | | | | | | | | | | | | | | | | | ● | | | | ● | | | ● | |
| 1-479-166-21 | | | | | | | | ● | ● | ● | ● | ● | ● | ● | ● | ● | | | | ● | | | | | |
| 1-479-169-71 | | | | | | | | | | | | | | | | | | | | | | | | | |
| 1-479-166-61 | | | | ● | | ● | | | | | | | | | | | | | | | | | | | |
| 1-796-958-11 | ● | ● | ● | ● | | ● | | ● | ● | ● | | ● | | | | ● | ● | ● | ● | | | | | ● | |
| 1-796-958-31 | | | | | ● | | ● | | | | ● | | ● | ● | ● | | | | | ● | ● | ● | ● | | ● |
| | △1 [MA] | △1 [MA] | △1 [MA] | △1 [MA] | △1 [MA] | △1 [MA] | △5 [MA] | △2 [MA] | △2 [MA] | △2 [MA] | △2 [MA] | △2 [MA] | △2 [MA] | △2 [MA] | △2 [MA] | △2 [MA] | △2 [MA] | △2 [MA] | △5 [MA] | △2 [MA] | △2 [MA] | △2 [MA] | △5 [MA] | △3 [MA] | △5 [MA] |

Note: the first two EU/AO-group values listed as △1 [MA] begin at S460F/S450FP in the AM group: S460F △1 [MA], S450FP △1 [MA].

- This parts list contains two different types of parts.
  The first type is the parts that are common to all models.
  The other type is the parts that are different depending on each model.

- この部品表は，機種共通の部品と，機種によって使い分けが必要な部品に分かれています。

Sony Confidential

# M-1.Main Board

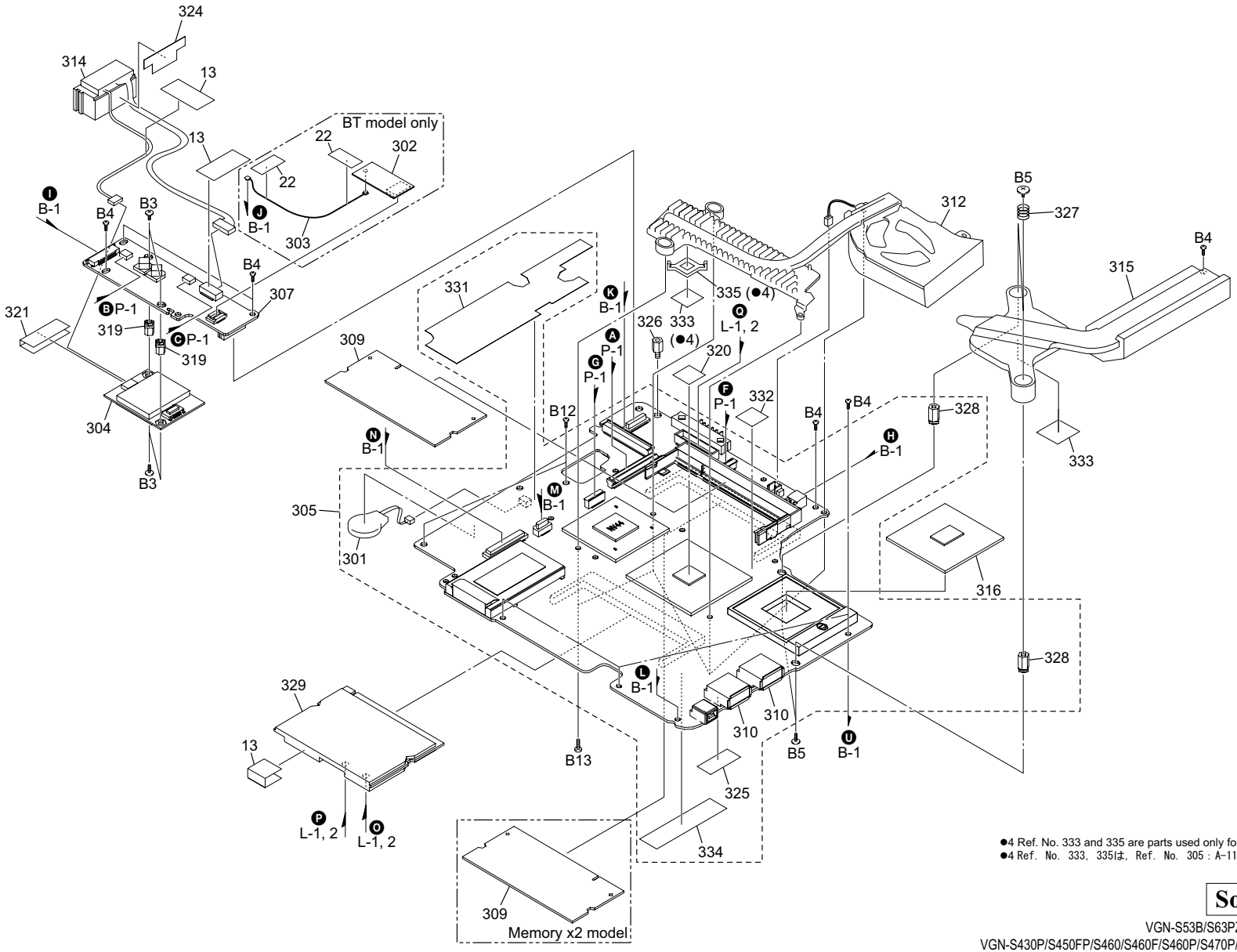


●4 Ref. No. 333 and 335 are parts used only for Ref. No. 305: A-1124-111-A.
●4 Ref. No. 333, 335は, Ref. No. 305 : A-1124-111-Aのみに使用する部品です。

**Sony Confidential**

# M-1.Main Board

| Ref. No. | Part No. | | Description |
|---|---|---|---|
| 13 | 4-662-881-02 | | CUSHION, KEY BOARD |
| 22 | 4-672-493-01 | | COVER (SC) |
| 301 | 1-756-544-11 | | LITHIUM RECHARGEABLE BATTERY |
| 304 | 1-417-539-12 | # | CARD, MODEM |
| 307 | A-1124-114-A | $ | COMPLETE PWB IFX385 (S) |
| 310 | 1-794-548-21 | | CONNECTOR, USB(A) |
| 312 | 1-787-301-11 | | FAN,DC(5V) |
| 314 | 1-962-758-21 | | HARNESS ,RJ-45/21 |
| 315 | 2-580-414-01 | | HEATSINK UNIT |
| 319 | 4-655-326-01 | | OFF, STAND |
| 320 | 2-580-415-01 | | SHEET THERMAL |
| 321 | 2-059-468-02 | | SHEET MDC |
| 324 | 2-109-080-02 | | SHEET RJ-CON |
| 325 | 2-059-469-02 | | SHEET USB |
| 326 | 4-651-989-51 | | SPACER (MBX) |
| 327 | 2-102-944-01 | | SPRING HEATSINK |
| 328 | 2-050-130-01 | | STAND (OFF) |
| 331 | 2-580-891-01 | | SHEET MBX-OPT |
| 333 | 2-580-416-01 | | SHEET PHASE CHANGE |
| 334 | 2-580-397-01 | | SHEET BOTTOM 2 |
| B3 | 4-672-836-01 | | SCREW, M2 SPECIAL HEAD,EG GRIP |
| B4 | 4-672-834-51 | | SCREW, +B EG GRIP |
| B5 | 2-050-159-01 | | M2 SPECIAL HEAD D7,T1 |
| B12 | 4-654-387-01 | | SCREW (MBX) |
| B13 | 4-672-834-91 | | SCREW, +B EG GRIP |

| | | | | J | | | | | AM | | | | | | | | | | EU | | | | | | | | AO | | | | | | | | | | | | | | | | | | | | | | | | | |
|---|---|---|---|---|---|---|---|---|---|---|---|---|---|---|---|---|---|---|---|---|---|---|---|---|---|---|---|---|---|---|---|---|---|---|---|---|---|---|---|---|---|---|---|---|---|---|---|---|---|---|---|---|
| | Ref.No. | Part No. | | Description | S73PB/B | S53B/S | S93PS/S+ | S93PSY+ | S93S/S+ | S63PZ/B | S460P/B | S470P/S | S460/B | S450+ | S450P+ | S480B+ | S480BH+ | S430P/S | S460F | S460P | S470P | S4VP/B | S4HP/B | S4HRP/B | S4M/S | S4XRP/B | S4Z/S | S46CP/B | S46CP/B | S46CP/B | S46C/B | S46C/S | S46CP/S | S46C/S | S46GP/B | S46TP/B | S47SP/B | S47LP/B | S46GP/S | S46TP/S | S45SP/S | S45LP/S | S44TP/B | S43LP/S |
| | 302 | 1-805-554-21 | | BLUETOOTH MODULE | | | | | | | | | | | ● | ● | ● | | | | | ● | ● | ● | | | | ● | ● | ● | ● | ● | ● | ● | ● | ● | | | | ● | ● | | | ● | | | | | |
| | 303 | 1-829-369-11 | | CABLE, COAXIAL (WITH U.F.L CON) | | | | | | | | | | | ● | ● | ● | | | | | ● | ● | ● | | | | ● | ● | ● | ● | ● | ● | ● | ● | | | | | ● | ● | | | ● | | | | | |
| | 305 | A-1124-110-A | $ | COMPLETE MBX-129 (EXT) (S) | ● | | ● | ● | ● | | ● | ● | ● | | ● | ● | ● | | | | | ● | ● | ● | ● | ● | ● | ● | ● | ● | ● | ● | | ● | ● | ● | ● | ● | ● | ● | ● | ● | ● | ● | ● | ● | ● | ● | ● |
| | | A-1124-111-A | $ | COMPLETE PWB MBX-129 (INT) (S) | | ● | ● | ● | ● | ● | | | | | ● | ● | ● | ● | ● | ● | | | | | | | | | | | | ● | ● | | | | | | | | | | | | | | | | |
| | 309 | 6-707-355-01 | # | IC EBE52UD6ABSA-4A-E | ● | | ● | ● | ● | | | ● | | | | | | ● | | | | | | | | | | | | | | | | ● | ● | ● | ● | ● | ● | ● | ● | ● | ● | ● | ● | ● | ● | ● | ● |
| | | 6-707-554-01 | # | IC HYS64T128021HDL-5-A | | | ● | ● | ● | | | | | ● | ● | ● | | | | | | | | | | | | | | | | | | | | | | | | | | | | | | | | | |
| | | 6-707-352-01 | # | IC HYS64T128021HDL-5-A | | | ● | ● | ● | | | | | ● | ● | ● | ● | | ● | ● | | | | | | ● | | | | | | ● | ● | | | | | | | | | | | | | | | | |
| △ [MA] | | 6-708-150-01 | # | IC MT8HTF6464HDY-667E3 | | | | | | | | | | | | | | | | | | ● | ● | ● | ● | | | | | | | | | | | | | | | | | | | | | | | | |
| | | 6-708-087-01 | # | IC M470T3354BZ0-CC5 | | | | | | | ● | | | | | | | | | | | | | | | ● | | | | | | | | | | | | | | | | | | | | | | | | |
| | | 6-707-350-01 | # | IC HYS64T64020HDL-5-A | | | | | ● | | | | | | ● | ● | ● | | | | | | | | | | | ● | ● | ● | ● | ● | | | | | | | | | | | | | | | | | |
| | 316 | 6-707-252-01 | | IC RH80536GE0252MSL86G | | ● | ● | ● | ● | | | | | | ● | ● | ● | ● | | ● | | | | | | | | | | | | | ● | ● | | | | | | | | | | | | | | | |
| | | 6-707-258-01 | | IC RH80536GE0302MSL7SA | | | | | | | ● | ● | ● | | ● | ● | ● | ● | | | | | | ● | ● | | | ● | | ● | ● | ● | ● | | | | | | | ● | ● | ● | ● | ● | ● | | | | |
| | | 6-707-259-01 | | IC RH80536GE0402MSL7SB | ● | | ● | ● | ● | | | | | | ● | ● | ● | ● | | | | | | | | | | | ● | | | | | | | | | | | | | | | | | | | | |
| | | 6-707-260-01 | | IC RH80536GE0412MSL7SM | | | | | | | | | | | ● | ● | ● | ● | | | | ● | | | | | ● | | | | | | | | ● | ● | ● | ● | | | | | | | | | | | |
| | | 6-707-551-01 | | IC RH80536GE0472MSL9S0 | | | ● | ● | ● | | | | | | ● | ● | ● | ● | | | | | | | | | | ● | | | | | | | | | | | | | | | | | | | | | |
| | | 6-707-771-01 | | IC RH80536NC0171MSL86K | | | ● | ● | ● | | | | | | ● | ● | ● | ● | | | | | | | | | | | | | | | | | | | | | | | | | | | | | | | |
| | 329 | 1-761-564-51 | | WIRELESS LAN CARD | | | | | | | ● | ● | ● | | ● | ● | ● | | ● | ● | | | | | | | | | | | | | | | | ● | | | | | ● | | | | | | | | |
| | | 1-761-864-61 | | WIRELESS LAN CARD | ● | ● | ● | ● | ● | ● | | | | | | | | | | | | | | | | | | | | | | | | | | | | | | | | | | | | | | | |
| △ [MA] | | 1-761-864-71 | | WIRELESS LAN CARD | | | | | | | | | | | | | | | | | | ● | ● | ● | ● | ● | ● | ● | ● | ● | ● | ● | ● | ● | | ● | | ● | ● | | ● | | ● | | | | | | ● |
| | 332 | 2-592-235-01 | | TAPE FERRITE SHORT | | | | | | | ● | ● | ● | ● | ● | ● | ● | ● | ● | ● | ● | ● | ● | ● | ● | ● | ● | ● | ● | ● | ● | ● | ● | ● | ● | ● | ● | ● | ● | ● | ● | ● | ● | ● | ● | ● | ● | ● | ● | ● |
| | 335 | 2-580-413-01 | | GFX SPACER | | ● | ● | ● | ● | ● | | | | | ● | ● | ● | ● | ● | ● | | | | | | | | | | | | ● | ● | | | | | | | | | | | | | | | | |
| | | | | | | | | | | △ [MA] | | | | | | | | △ [MA] | | △ [MA] | △ [MA] | △ [MA] | △ [MA] | △ [MA] | △ [MA] | △ [MA] | △ [MA] | △ [MA] | △ [MA] | △ [MA] | △ [MA] | △ [MA] | △ [MA] | △ [MA] | △ [MA] | △ [MA] | △ [MA] | △ [MA] | △ [MA] | △ [MA] | △ [MA] | △ [MA] | △ [MA] | △ [MA] | △ [MA] | △ [MA] | △ [MA] | △ [MA] | △ [MA] |

- This parts list contains two different types of parts.
  The first type is the parts that are common to all models.
  The other type is the parts that are different depending on each model.

- この部品表は，機種共通の部品と，機種によって使い分けが必要な部品に分かれています。

- When change the CPU (ref. 316), refer to "Replacing the CPU" in CHAPTER 5.
- CPU（Ref. 316）を交換する際には，CHAPTER 5の「Replacing the CPU」をご参照下さい。

# B-1. Bottom

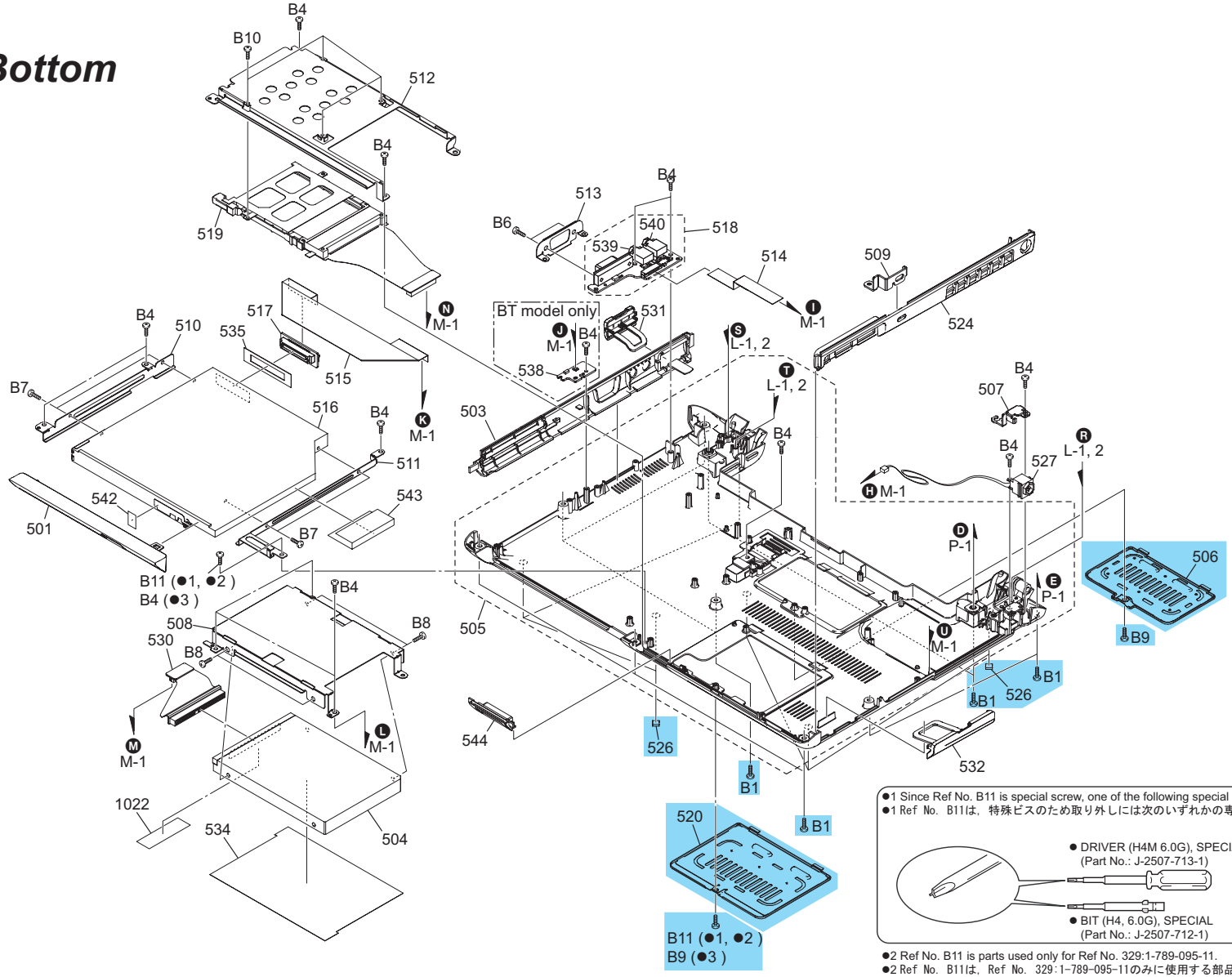


●1 Since Ref No. B11 is special screw, one of the following special tools is needed for removal.
●1 Ref No. B11は，特殊ビスのため取り外しには次のいずれかの専用工具が必要です。



● DRIVER (H4M 6.0G), SPECIAL
(Part No.: J-2507-713-1)

● BIT (H4, 6.0G), SPECIAL
(Part No.: J-2507-712-1)

●2 Ref No. B11 is parts used only for Ref No. 329:1-789-095-11.
●2 Ref No. B11は，Ref No. 329:1-789-095-11のみに使用する部品です。

●3 Ref No. B4 and B9 are parts used only for models are used for Ref No. 329:1-761-864-51,1-761-864-61,1-761-864-71.
●3 Ref No. B4，B9は，Ref No. 329:1-761-864-51,1-761-864-61,1-761-864-71を使用する機種のみに使用する部品です。

Sony Confidential

# B-1. Bottom

| Ref. No. | Part No. | | | Description |
|---|---|---|---|---|
| 503 | X-4626-768-2 | | | ASSY ESCUTCHEON L |
| 505 | X-2048-427-4 | | | ASSY HOUSING BOTTOM |
| 506 | X-2048-428-1 | | & | ASSY LID DIMM |
| 507 | 2-024-006-01 | | | BRACKET DC JACK |
| * 508 | 2-548-545-01 | | | BRACKET HDD |
| * 509 | 4-683-190-01 | | | BRACKET KENJINGTON |
| * 510 | 4-683-231-02 | | | BRACKET OPT L |
| 511 | 2-548-551-01 | | | BRACKET OPT R |
| 512 | 2-548-546-01 | | | BRACKET PCCARD |
| 513 | 4-683-192-01 | | | BRACKET VGA |
| 514 | 1-830-252-31 | | | CABLE, FLEXIBLE FLAT (22PIN) |
| 515 | 1-829-200-11 | | | CABLE, FLEXIBLE FLAT (50PIN) |
| 517 | A-1124-113-A | $ | | COMPLETE PWB CNX299 (S) |
| 518 | A-1124-112-A | $ | | COMPLETE PWB CNX298 (S) |
| 519 | 1-818-398-21 | | | CONNECTOR, FPC WITH PC CARD |
| 520 | X-2048-429-1 | | & | ASSY LID WLAN |
| 524 | 2-548-830-01 | | | ESCUTCHEON R |
| 526 | 4-683-197-01 | | & | FOOT |
| 527 | 1-963-592-11 | | | HARNESS,CONNECTOR WITH |
| 530 | 1-830-171-11 | | | CABLE, FLEXIBLE POLYIMIDE CABL |
| 531 | 4-683-188-01 | | | RUBBER DOOR MODEM |
| 532 | 4-683-186-01 | | | RUBBER DOOR USB |
| 534 | 2-023-591-02 | | | SHEET HDD |
| 535 | 2-059-467-02 | | | SHEET OPT |
| 539 | 1-694-760-21 | | | JACK, SMALL TYPE |
| 540 | 1-694-760-41 | | | JACK, SMALL TYPE |
| 542 | 4-659-711-02 | | | SHEET (BOSS) |
| 543 | 2-178-741-01 | | | SHEET 35X25 |
| 544 | 2-548-831-01 | | | ESCUTCHEON MS |
| 1022 | - | | | FILAMENT TAPE 12X30 |
| B1 | 4-672-834-71 | | & | SCREW, +B EG GRIP |
| B4 | 4-672-834-51 | | | SCREW, +B EG GRIP |
| B6 | 4-674-716-01 | | | SCREW (NO.4-40) (UNC) |
| B7 | 4-671-538-01 | | | SCREW(M2X4), SPECIAL HEAD |
| B8 | 4-672-839-01 | | | HEAD, M3 FLAT |
| B10 | 2-050-180-01 | | | +SCREW,O2 +SPECIAL HEAD |

| | Ref.No. | Part No. | | | Description | J | | | | | AM | | | | | | | | | EU | | | | | | AO | | | | | | | | | | | | | | | | | | | | | | | | | | | | | | | |
|---|---|---|---|---|---|---|---|---|---|---|---|---|---|---|---|---|---|---|---|---|---|---|---|---|---|---|---|---|---|---|---|---|---|---|---|---|---|---|---|---|---|---|---|---|---|---|---|---|---|---|---|---|---|---|---|---|---|
| | | | | | | S73PR/B | S53B/S | S93PS/S+ | S93PSY+ | S93S/S+ | S63PZ/B | S460P/B | S470P/S | S460/B | S480+ | S480P+ | S480B+ | S480BH+ | S450P/S | S460F | S460P | S470P | S4VP/B | S4HP/B | S4HRP/B | S4M/S | S4XRP/B | S4Z/S | S46CP/B | S46CP/B | S46CP/B | S46C/B | S46CP/S | S46C/S | S46C/S | S46GP/B | S47LP/B | S47TP/B | S46GP/S | S46TP/S | S45SP/S | S45LP/S | S44TP/B | S43LP/S |
| | 501 | X-2024-607-1 | | | ASSY BEZEL OPT COMBO | | | ● | ● | ● | ● | | | ● | ● | ● | ● | ● | ● | | ● | | | | | | | | | ● | ● | ● | ● | ● | | | | | | | | | | | | ● | ● |
| | | X-2055-733-1 | | | ASSY BEZEL OPT +R/W DL | | | | | | | ● | ● | ● | ● | ● | ● | ● | | ● | | ● | ● | ● | ● | ● | ● | ● | ● | ● | | | | | | ● | ● | ● | ● | ● | ● | ● | ● | | |
| | | X-2055-734-1 | | | ASSY BEZEL OPT MLT DL | ● | ● | ● | ● | ● | | | | | | | | | | | | | | | | | | | | | | | | | | | | | | | | | | | | | | | | | | | |
| | 504 | A-1105-612-A | $ | # | HDD (100GB,HTS541010) (S) | | | ● | ● | ● | | | | | ● | ● | ● | ● | | | | | | | | | | | | | | | | | | | | | | | | | | | | | | | | | | | | | |
| △ [MA] | | A-1105-614-A | $ | # | HDD (60GB,HTS541060) (S) | | | | | | | | | | | | | | | | | | | | | | | | | | | | | | | | | | | ● | | | | | | | | | | | | | | | |
| | | A-1108-510-A | $ | # | HDD (MHT2080-80GB) (S) | | | | | | | ● | ● | ● | | | | | | | | | ● | | | | | | ● | ● | | | | | | | | | | | | | | | | | | | | | | | | | |
| | | A-1108-909-A | $ | # | HDD (MHT2080-60GB) (S) | | | ● | ● | ● | ● | | | | ● | ● | ● | ● | ● | ● | | | | ● | ● | ● | ● | | | | | | | | | ● | ● | ● | ● | ● | | ● | | | | | | | | | | | | | |
| | | A-1109-275-A | $ | # | HDD (MHT2040-40GB) (S) | | | | | | | | | | | ● | ● | ● | | | ● | | | | | | | | | | ● | | ● | | ● | | | | | | | | | | | | | | | | | | | | | |
| | | A-1105-615-A | $ | # | HDD (40GB,HTS541040) (S) | | | | ● | ● | ● | | | | | | | | | | | | | | | | | | | | | ● | | ● | | ● | | | | | | | | | | | | | | | | | | ● | ● |
| | | A-1105-613-A | $ | # | HDD (80GB,HTS541080) (S) | ● | | | ● | ● | ● | | | | ● | ● | ● | ● | | | | | | | | | ● | | | | | | | | | | | | | | | | | | | | | | | | | | | | | |
| | | A-1121-699-A | $ | # | HDD (MK1032GSX-100GB) (S) | | | | ● | ● | ● | | | | ● | ● | ● | ● | | | | ● | | | | | | ● | | | | | | | | | | | | | | | | | | | | | | | | | | | | | |
| | 516 | 1-797-054-11 | | # | COMBO DRIVE (UJDA765,9.5MM) | | | | ● | ● | ● | | | | ● | ● | ● | ● | ● | | ● | | | | | | | | | | ● | ● | ● | ● | ● | | | | | | | | | | | | | | ● | ● |
| | | 1-797-272-11 | | # | DVD+-RW(UJ-832B,9.5MM) | ● | | ● | ● | ● | ● | | | | | | | | | | | | | | | | | | | | | | | | | | | | | | | | | | | | | | | | | | | | |
| | | 1-797-272-11 | | # | DVD+-RW(UJ-832B,9.5MM) | | | | | | | ● | ● | ● | ● | ● | ● | ● | | ● | | ● | ● | ● | ● | ● | ● | ● | ● | ● | | | | | | ● | ● | ● | ● | ● | ● | ● | ● | | |
| | 538 | A-1124-285-A | $ | | COMPLETE PWB IFX331 (-21) (S) | | | | | | | | | | ● | ● | ● | ● | | | | ● | ● | ● | | | | | ● | ● | ● | ● | ● | ● | ● | | | | | | ● | ● | | | | ● | |
| | B9 | 4-673-648-01 | | & | GRIP, M2 (+B) (EG) | ● | ● | ● | ● | ● | ● | ● | ● | ● | ● | ● | ● | ● | ● | ● | ● | ● | ● | ● | ● | ● | ● | ● | ● | ● | ● | ● | ● | ● | ● | ● | ● | ● | ● | ● | ● | ● | ● | ● | ● | ● | ● | ● | ● | ● | ● | ● | ● |
| | B11 | 4-681-432-21 | | & | SCREW (M2) (SPIN) | | | | | | | | | | ● | ● | ● | ● | | | | | | | | | | | | | | | | | | | | | | | | | | | | | | | | | | | | | | |
| | | | | | | | | | | △ [MA] | | | | | | | | △ [MA] | △ | | △ [MA] | △ [MA] | △ [MA] | △ [MA] | △ [MA] | △ [MA] | △ [MA] | △ [MA] | △ [MA] | △ [MA] | △ [MA] | △ [MA] | △ [MA] | △ [MA] | △ [MA] | △ [MA] | △ [MA] | △ [MA] | △ [MA] | △ [MA] | △ [MA] | △ [MA] | △ [MA] | △ [MA] | △ [MA] | △ [MA] | △ [MA] | △ [MA] | △ [MA] | △ [MA] | △ [MA] | △ [MA] | △ [MA] | △ [MA] | △ [MA] | △ [MA] | △ [MA] |

- This parts list contains two different types of parts.
  The first type is the parts that are common to all models.
  The other type is the parts that are different depending on each model.
- Ref No. B11 is parts used only for Ref No. 329:1-789-095-11.
- Ref No. B4 and B9 are parts used only for Ref No. 329:1-761-864-51,1-761-864-61,1-761-864-71.

- この部品表は，機種共通の部品と，機種によって使い分けが必要な部品に分かれています。
- Ref No. B11は，Ref No. 329:1-789-095-11のみに使用する部品です。
- Ref No. B4，B9は，Ref No. 329:1-761-864-51,1-761-864-61,1-761-864-71を使用する機種のみに使用する部品です。

# L-1. LCD 13.3-inch WXGA (Brighter)
## – Made by TO –

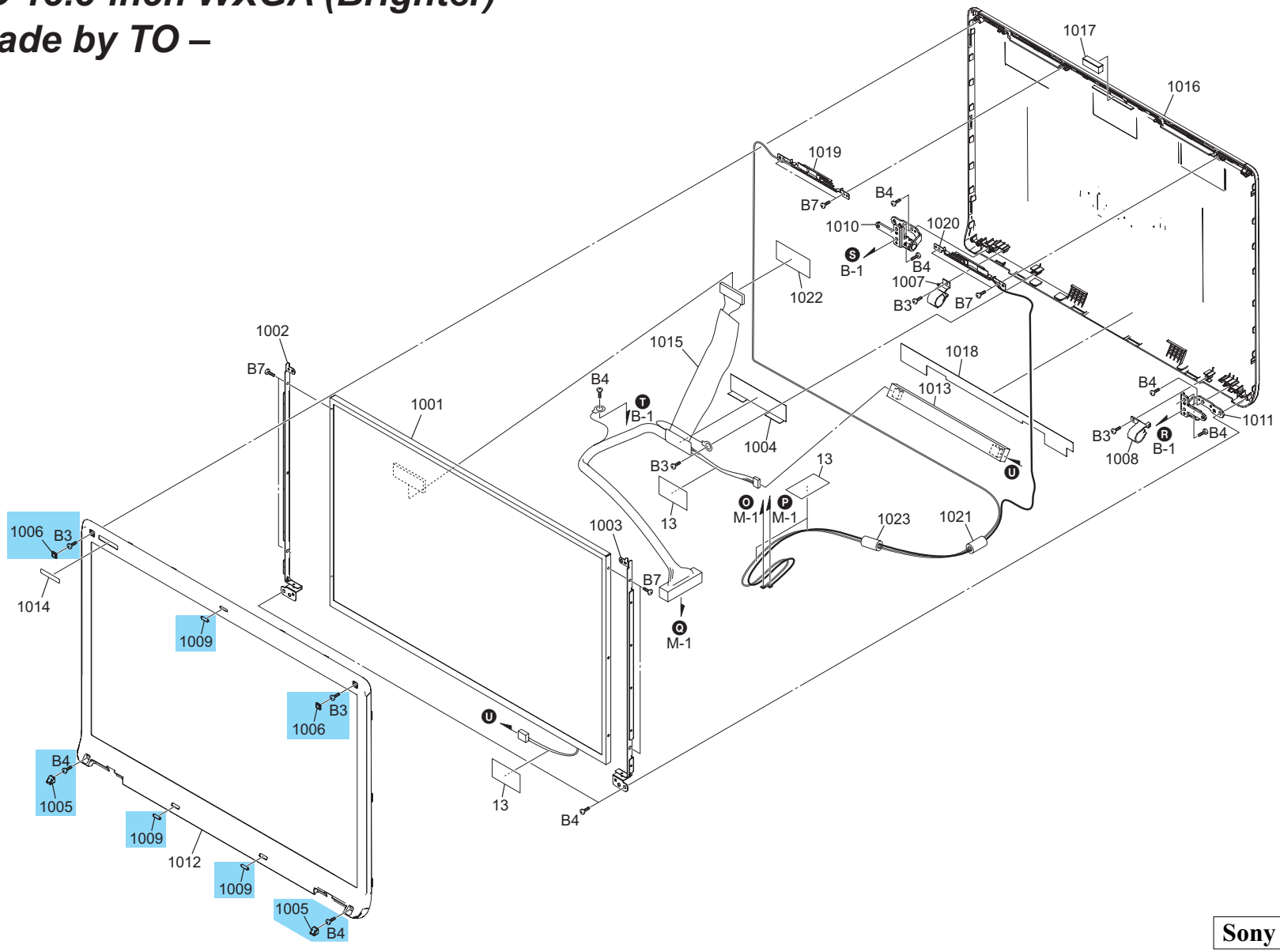

# L-1. LCD 13.3-inch WXGA (Brighter) – Made by TO –

| Ref. No. | Part No. | | | Description |
|---|---|---|---|---|
| 13 | 4-662-881-02 | | | CUSHION, KEY BOARD |
| 1001 | A-1072-481-A | $ | # | LCD UNIT(13.3 WXGA) (S) |
| * 1002 | 4-683-218-01 | | | BRACKET LCD L |
| * 1003 | 4-683-219-01 | | | BRACKET LCD R |
| 1004 | 4-673-031-01 | | | COPPER TAPE(LCD) |
| 1010 | 4-683-225-02 | | | HINGE L |
| 1011 | 4-683-226-02 | | | HINGE R |
| 1013 | 1-478-924-31 | | | INVERTER UNIT |
| 1015 | 1-963-526-11 | | | LCD HARNESS |
| 1017 | 2-024-668-01 | | | MAGNET (LID) |
| 1018 | 2-067-394-01 | | | SHEET CABLE WLL |
| 1019 | 1-754-331-22 | | | ANTENNA (2.4/5GHZ FOR LEFT) |
| 1020 | 1-754-331-12 | | | ANTENNA (2.4/5GHZ FOR RIGHT) |
| 1022 | - | | | FILAMENT TAPE 12X30 |
| B3 | 4-672-836-01 | | <&> | SCREW, M2 SPECIAL HEAD,EG GRIP |
| B4 | 4-672-834-51 | | <&> | SCREW, +B EG GRIP |
| B7 | 4-671-538-01 | | | SCREW(M2X4), SPECIAL HEAD |

| | | | | | J | | | | AM | | | AO | | | | | | | | | | | | | |
|---|---|---|---|---|---|---|---|---|---|---|---|---|---|---|---|---|---|---|---|---|---|---|---|---|---|
| | Ref.No. | Part No. | | Description | S73PB/B | S53B/S | S63PS/S+ | S93PSY+ | S93S/S+ | S460P/B | S470P/S | S460/B | S480BH+ | S49CP/B | S48CP/B | S46CP/S | S46GP/B | S46C/B | S46C/S | S45CP/S | S46CP/S | S46GP/B | S48TP/B | S47LP/B | S46GP/S | S46TP/S | S45LP/S | S44TP/B | S43LP/S |
| | 1005 | 4-683-220-01 | & | COVER DISPLAY SCREW LO | ● | | | | | ● | | ● | ● | ● | ● | ● | | ● | | | | ● | ● | ● | | | | ● | |
| | | 4-683-220-11 | & | COVER DISPLAY SCREW LO | | ● | ● | ● | ● | | ● | | | | | | ● | | ● | ● | ● | | | | ● | ● | ● | | ● |
| | 1006 | 4-683-221-01 | & | COVER DISPLAY SCREW UP | ● | | | | | ● | | ● | ● | ● | ● | ● | | ● | | | | ● | ● | ● | | | | ● | |
| | | 4-683-221-11 | & | COVER DISPLAY SCREW UP | | ● | ● | ● | ● | | ● | | | | | | ● | | ● | ● | ● | | | | ● | ● | ● | | ● |
| | 1007 | 4-683-222-01 | | COVER HINGE L | ● | | | | | ● | | ● | ● | ● | ● | ● | | ● | | | | ● | ● | ● | | | | ● | |
| | | 4-683-222-11 | | COVER HINGE L | | ● | ● | ● | ● | | ● | | | | | | ● | | ● | ● | ● | | | | ● | ● | ● | | ● |
| | 1008 | 4-683-223-03 | | COVER HINGE R | ● | | | | | ● | | ● | ● | ● | ● | ● | | ● | | | | ● | ● | ● | | | | ● | |
| | | 4-683-223-12 | | COVER HINGE R | | ● | ● | ● | ● | | ● | | | | | | ● | | ● | ● | ● | | | | ● | ● | ● | | ● |
| | 1009 | 4-683-224-01 | & | CUSHION BEZEL | ● | | | | | ● | | ● | ● | ● | ● | ● | | ● | | | | ● | ● | ● | | | | ● | |
| | | 4-683-224-11 | & | CUSHION BEZEL | | ● | ● | ● | ● | | ● | | | | | | ● | | ● | ● | ● | | | | ● | ● | ● | | ● |
| | 1012 | 4-683-217-03 | | HOUSING BEZEL | ● | | | | | ● | | ● | ● | ● | ● | ● | | ● | | | | ● | ● | ● | | | | ● | |
| | | 4-683-217-11 | | HOUSING BEZEL | | ● | ● | ● | ● | | ● | | | | | | ● | | ● | ● | ● | | | | ● | ● | ● | | ● |
| ⚠ [MA] | 1014 | 2-630-747-01 | | LABEL ID (C) | | | | | | | | | | ● | | | | | | | | | | | | | | | |
| ⚠ [MA] | | 2-630-747-11 | | LABEL ID (C) | | | | | | | | | | | ● | | | | | | | | | | | | | | |
| ⚠ [MA] | | 2-630-747-21 | | LABEL ID (C) | | | | | | | | | | | | ● | | | | | | | | | | | | | |
| ⚠ [MA] | | 2-630-747-31 | | LABEL ID (C) | | | | | | | | | | | | | ● | | | | | | | | | | | | |
| ⚠ [MA] | | 2-630-747-41 | | LABEL ID (C) | | | | | | | | | | | | | | ● | | | | | | | | | | | |
| ⚠ [MA] | | 2-630-747-51 | | LABEL ID (C) | | | | | | | | | | | | | | | ● | | | | | | | | | | |
| ⚠ [MA] | | 2-630-747-61 | | LABEL ID (C) | | | | | | | | | | | | | | ● | | | | | | | | | | | |
| ⚠ [MA] | | 2-630-747-71 | | LABEL ID (C) | | | | | | | | | | | | | | | ● | | | | | | | | | | |
| ⚠ [MA] | | 2-629-251-01 | | LABEL ID (I BLACK) | | | | | | | | | | | | | | | | | | ● | | | | | | | |
| ⚠ [MA] | | 2-629-251-11 | | LABEL ID (I BLACK) | | | | | | | | | | | | | | | | | | | ● | | | | | | |
| ⚠ [MA] | | 2-629-251-31 | | LABEL ID (I BLACK) | | | | | | | | | | | | | | | | | | | | ● | | | | | |
| ⚠ [MA] | | 2-629-251-41 | | LABEL ID (I BLACK) | | | | | | | | | | | | | | | | | | | | | | | | ● | |
| ⚠ [MA] | | 2-629-252-01 | | LABEL ID (I SILVER) | | | | | | | | | | | | | | | | | | | | | ● | | | | |
| ⚠ [MA] | | 2-629-252-11 | | LABEL ID (I SILVER) | | | | | | | | | | | | | | | | | | | | | | ● | | | |
| ⚠ [MA] | | 2-629-252-31 | | LABEL ID (I SILVER) | | | | | | | | | | | | | | | | | | | | | | | ● | | |
| ⚠ [MA] | | 2-629-252-41 | | LABEL ID (I SILVER) | | | | | | | | | | | | | | | | | | | | | | | | | ● |
| | | 2-598-357-01 | | LABEL ID (J) | ● | | | | | | | | | | | | | | | | | | | | | | | | |
| | | 2-598-357-11 | | LABEL ID (J) | | ● | | | | | | | | | | | | | | | | | | | | | | | |
| | | 2-598-329-01 | | LABEL ID (JCTO) | | | ● | | | | | | | | | | | | | | | | | | | | | | |
| | | 2-598-329-11 | | LABEL ID (JCTO) | | | | ● | | | | | | | | | | | | | | | | | | | | | |
| | | 2-598-329-21 | | LABEL ID (JCTO) | | | | | ● | | | | | | | | | | | | | | | | | | | | |
| | | 2-598-485-01 | | LABEL ID (UD) | | | | | | ● | | | | | | | | | | | | | | | | | | | |
| | | 2-598-485-11 | | LABEL ID (UD) | | | | | | | ● | | | | | | | | | | | | | | | | | | |
| | | 2-598-485-31 | | LABEL ID (UD) | | | | | | | | ● | | | | | | | | | | | | | | | | | |
| ⚠ [MA] | | 2-598-563-31 | | LABEL ID (U) | | | | | | | | | ● | | | | | | | | | | | | | | | | |
| | 1016 | A-1101-121-A | $ | ASSY DISPLAY(S) | ● | | | | | ● | | ● | ● | ● | ● | ● | | ● | | | | ● | ● | ● | | | | ● | |
| | | A-1098-489-A | $ | ASSY DISPLAY SILVER(S) | | ● | ● | ● | ● | | ● | | | | | | ● | | ● | ● | ● | | | | ● | ● | ● | | ● |
| | 1021 | 1-400-255-11 | | FERRITE CORE | | | | | | ● | ● | ● | ● | ● | ● | ● | ● | ● | ● | ● | ● | ● | ● | ● | ● | ● | ● | ● | ● |
| | 1023 | 1-500-863-11 | | FERRITE CORE | | | | | | ● | ● | ● | ● | ● | ● | ● | ● | ● | ● | ● | ● | ● | ● | ● | ● | ● | ● | ● | ● |
| | | | | | | | | | | | | | ⚠ [MA] | ⚠ [MA] | ⚠ [MA] | ⚠ [MA] | ⚠ [MA] | ⚠ [MA] | ⚠ [MA] | ⚠ [MA] | ⚠ [MA] | ⚠ [MA] | ⚠ [MA] | ⚠ [MA] | ⚠ [MA] | ⚠ [MA] | ⚠ [MA] | ⚠ [MA] | ⚠ [MA] | ⚠ [MA] |

- This parts list contains two different types of parts.
  The first type is the parts that are common to all models.
  The other type is the parts that are different depending on each model.

- この部品表は，機種共通の部品と，機種によって使い分けが必要な部品に分かれています。

# L-2. LCD 13.3-inch WXGA (Brighter)
## – Made by SH –

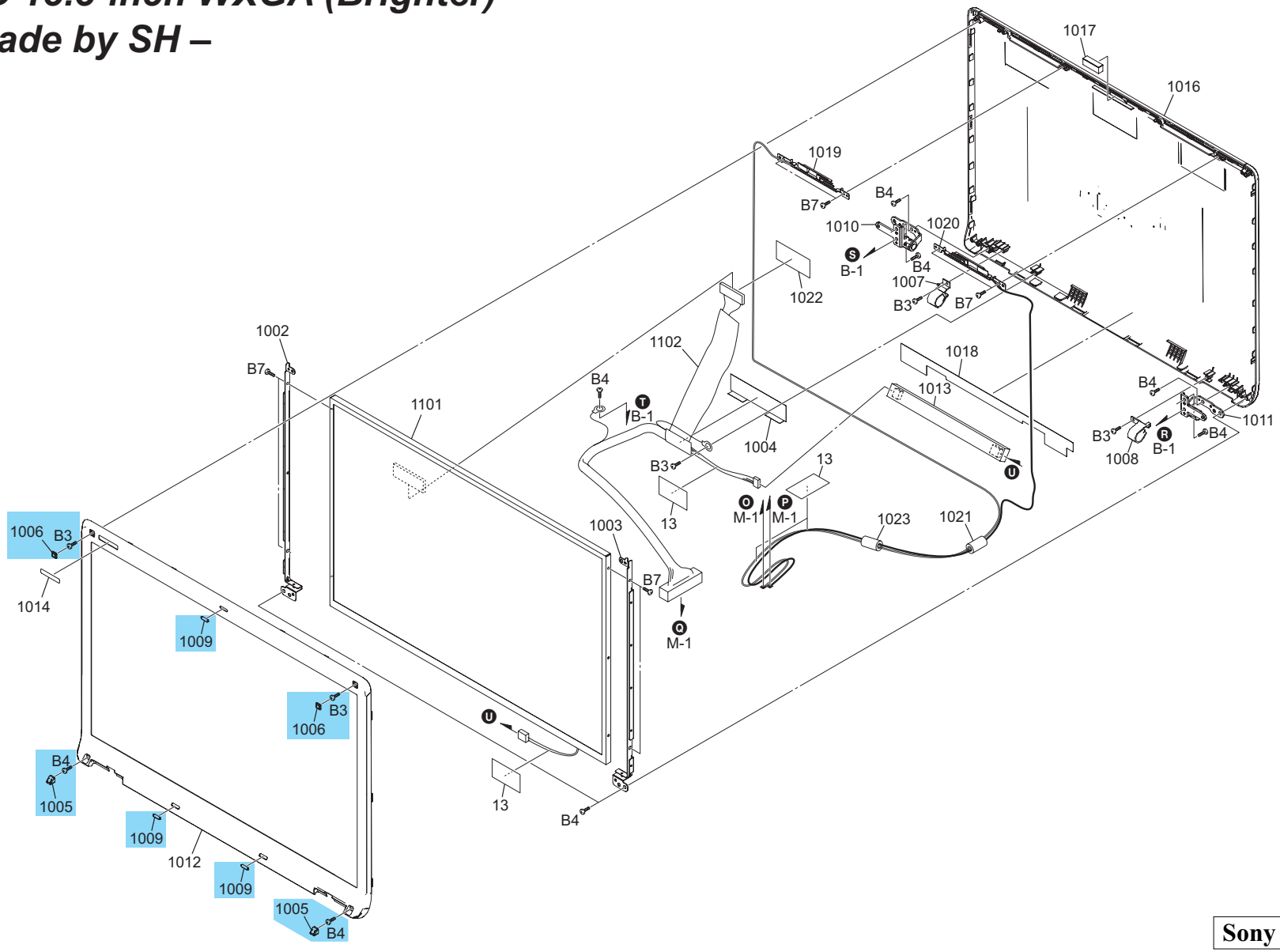

# L-2. LCD 13.3-inch WXGA (Brighter) – Made by SH –

| Ref. No. | Part No. | | | Description |
|---|---|---|---|---|
| 13 | 4-662-881-02 | | | CUSHION, KEY BOARD |
| * 1002 | 4-683-218-01 | | | BRACKET LCD L |
| * 1003 | 4-683-219-01 | | | BRACKET LCD R |
| 1004 | 4-673-031-01 | | | COPPER TAPE(LCD) |
| 1010 | 4-683-225-02 | | | HINGE L |
| 1011 | 4-683-226-02 | | | HINGE R |
| 1013 | 1-478-924-31 | | | INVERTER UNIT |
| 1017 | 2-024-668-01 | | | MAGNET (LID) |
| 1018 | 2-067-394-01 | | | SHEET CABLE WLL |
| 1019 | 1-754-331-22 | | | ANTENNA (2.4/5GHZ FOR LEFT) |
| 1020 | 1-754-331-12 | | | ANTENNA (2.4/5GHZ FOR RIGHT) |
| 1022 | - | | | FILAMENT TAPE 12X30 |
| 1101 | A-1124-255-A | $ | # | LCD UNIT (13.3 WXGA SH) BR (S) |
| 1102 | 1-963-526-21 | | | LCD HARNESS |
| B3 | 4-672-836-01 | | <&> | SCREW, M2 SPECIAL HEAD,EG GRIP |
| B4 | 4-672-834-51 | | <&> | SCREW, +B EG GRIP |
| B7 | 4-671-538-01 | | | SCREW(M2X4), SPECIAL HEAD |

| | | | | | AM | | | | | EU | | | | | | AO | |
|---|---|---|---|---|---|---|---|---|---|---|---|---|---|---|---|---|---|
| | Ref.No. | Part No. | | Description | S48/b- | S48/Ob- | S48/Bb- | S430P/S | S460F | S460FP | S4XP/B | S4VP/B | S4HP/B | S4HRP/B | S4M/S | S4XRP/B | S4Z/S | S47SP/B | S46SP/S |
| | 1005 | 4-683-220-01 | & | COVER DISPLAY SCREW LO | ● | ● | ● | | ● | ● | ● | ● | ● | ● | | ● | | ● | |
| | | 4-683-220-11 | & | COVER DISPLAY SCREW LO | | | | ● | | | | | | | ● | | ● | | ● |
| | 1006 | 4-683-221-01 | & | COVER DISPLAY SCREW UP | ● | ● | ● | | ● | ● | ● | ● | ● | ● | | ● | | ● | |
| | | 4-683-221-11 | & | COVER DISPLAY SCREW UP | | | | ● | | | | | | | ● | | ● | | ● |
| | 1007 | 4-683-222-01 | | COVER HINGE L | ● | ● | ● | | ● | ● | ● | ● | ● | ● | | ● | | ● | |
| | | 4-683-222-11 | | COVER HINGE L | | | | ● | | | | | | | ● | | ● | | ● |
| | 1008 | 4-683-223-03 | | COVER HINGE R | ● | ● | ● | | ● | ● | ● | ● | ● | ● | | ● | | ● | |
| | | 4-683-223-12 | | COVER HINGE R | | | | ● | | | | | | | ● | | ● | | ● |
| | 1009 | 4-683-224-01 | & | CUSHION BEZEL | ● | ● | ● | | ● | ● | ● | ● | ● | ● | | ● | | ● | |
| | | 4-683-224-11 | & | CUSHION BEZEL | | | | ● | | | | | | | ● | | ● | | ● |
| | 1012 | 4-683-217-03 | | HOUSING BEZEL | ● | ● | ● | | ● | ● | ● | ● | ● | ● | | ● | | ● | |
| | | 4-683-217-11 | | HOUSING BEZEL | | | | ● | | | | | | | ● | | ● | | ● |
| △ [MA] | 1014 | 2-598-528-01 | | LABEL ID (E) | | | | | | | ● | | | | | | | | |
| △ [MA] | | 2-598-528-11 | | LABEL ID (E) | | | | | | | | ● | | | | | | | |
| △ [MA] | | 2-598-528-21 | | LABEL ID (E) | | | | | | | | | ● | | | | | | |
| △ [MA] | | 2-598-528-31 | | LABEL ID (E) | | | | | | | | | | ● | | | | | |
| △ [MA] | | 2-598-528-41 | | LABEL ID (E) | | | | | | | | | | | ● | | | | |
| △ [MA] | | 2-598-528-51 | | LABEL ID (E) | | | | | | | | | | | | ● | | | |
| △ [MA] | | 2-598-528-61 | | LABEL ID (E) | | | | | | | | | | | | | ● | | |
| △ [MA] | | 2-598-291-21 | | LABEL ID (T BLACK) | | | | | | | | | | | | | | ● | |
| △ [MA] | | 2-598-292-21 | | LABEL ID (T PINK) | | | | | | | | | | | | | | | ● |
| △ [MA] | | 2-598-487-01 | | LABEL ID (L) | | | | | ● | | | | | | | | | | |
| △ [MA] | | 2-598-487-11 | | LABEL ID (L) | | | | | | ● | | | | | | | | | |
| | | 2-598-563-01 | | LABEL ID (U) | | ● | | | | | | | | | | | | | |
| | | 2-598-563-11 | | LABEL ID (U) | ● | | | | | | | | | | | | | | |
| | | 2-598-565-21 | | LABEL ID (U) | | | ● | | | | | | | | | | | | |
| | | 2-598-495-31 | | LABEL ID (UD) | | | | ● | | | | | | | | | | | |
| | 1016 | A-1101-121-A | $ | ASSY DISPLAY(S) | ● | ● | ● | | ● | ● | ● | ● | ● | ● | | ● | | ● | |
| | | A-1099-489-A | $ | ASSY DISPLAY SILVER(S) | | | | ● | | | | | | | ● | | ● | | ● |
| | 1021 | 1-400-255-11 | | FERRITE CORE | ● | ● | ● | ● | ● | ● | ● | ● | ● | ● | ● | ● | ● | ● | ● |
| | 1023 | 1-500-863-11 | | FERRITE CORE | ● | ● | ● | ● | ● | ● | ● | ● | ● | ● | ● | ● | ● | ● | ● |
| | | | | | | | | | | | △ [MA] | △ [MA] | △ [MA] | △ [MA] | △ [MA] | △ [MA] | △ [MA] | △ [MA] | △ [MA] |

- This parts list contains two different types of parts.
  The first type is the parts that are common to all models.
  The other type is the parts that are different depending on each model.

- この部品表は，機種共通の部品と，機種によって使い分けが必要な部品に分かれています。

# L-3. LCD 13.3-inch WXGA

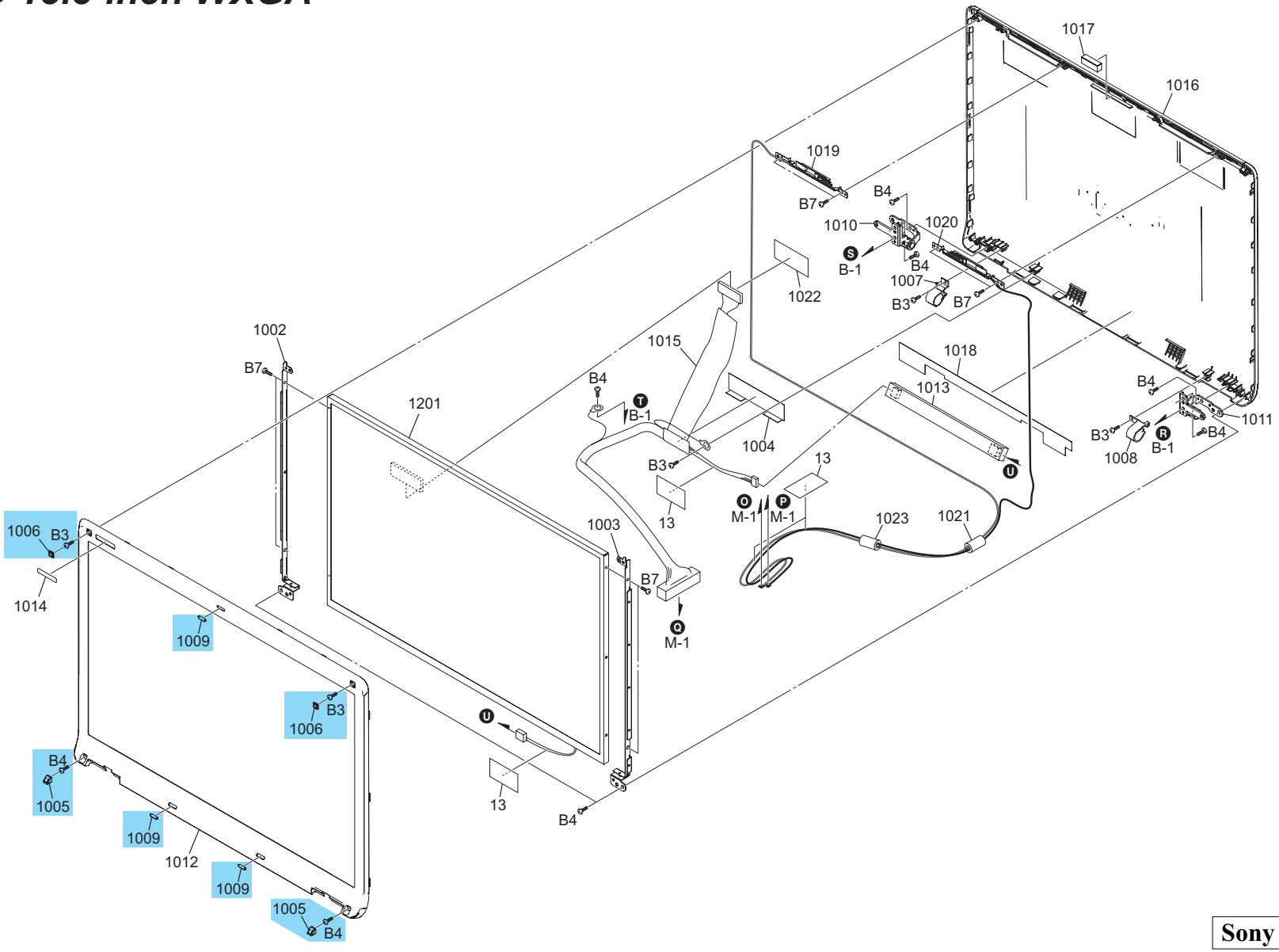

# L-3. LCD 13.3-inch WXGA

| Ref. No. | Part No. | | | Description |
|---|---|---|---|---|
| 13 | 4-662-881-02 | | | CUSHION, KEY BOARD |
| * 1002 | 4-683-218-01 | | | BRACKET LCD L |
| * 1003 | 4-683-219-01 | | | BRACKET LCD R |
| 1004 | 4-673-031-01 | | | COPPER TAPE(LCD) |
| 1010 | 4-683-225-02 | | | HINGE L |
| 1011 | 4-683-226-02 | | | HINGE R |
| 1013 | 1-478-924-31 | | | INVERTER UNIT |
| 1015 | 1-963-526-11 | | | LCD HARNESS |
| 1017 | 2-024-668-01 | | | MAGNET (LID) |
| 1018 | 2-067-394-01 | | | SHEET CABLE WLL |
| 1019 | 1-754-331-22 | | | ANTENNA (2.4/5GHZ FOR LEFT) |
| 1020 | 1-754-331-12 | | | ANTENNA (2.4/5GHZ FOR RIGHT) |
| 1022 | - | | | FILAMENT TAPE 12X30 |
| 1201 | A-1072-480-A | $ | # | LCD UNIT(13.3 WXGA ) NML (S) |
| B3 | 4-672-836-01 | | <> | SCREW, M2 SPECIAL HEAD,EG GRIP |
| B4 | 4-672-834-51 | | <> | SCREW, +B EG GRIP |
| B7 | 4-671-538-01 | | | SCREW(M2X4), SPECIAL HEAD |

| | | | | J | | | | AM | | | |
|---|---|---|---|---|---|---|---|---|---|---|---|
| Ref.No. | Part No. | | Description | S93PS/S+ | S93PSY+ | S93S/S+ | S63PZ/B | S480+ | S480P+ | S480B+ | S480BH+ |
| 1005 | 4-683-220-01 | & | COVER DISPLAY SCREW LO | | | | ● | ● | ● | ● | ● |
| | 4-683-220-11 | & | COVER DISPLAY SCREW LO | ● | ● | ● | | | | | |
| 1006 | 4-683-221-01 | & | COVER DISPLAY SCREW UP | | | | ● | ● | ● | ● | ● |
| | 4-683-221-11 | & | COVER DISPLAY SCREW UP | ● | ● | ● | | | | | |
| 1007 | 4-683-222-01 | | COVER HINGE L | | | | ● | ● | ● | ● | ● |
| | 4-683-222-11 | | COVER HINGE L | ● | ● | ● | | | | | |
| 1008 | 4-683-223-03 | | COVER HINGE R | | | | ● | ● | ● | ● | ● |
| | 4-683-223-12 | | COVER HINGE R | ● | ● | ● | | | | | |
| 1009 | 4-683-224-01 | & | CUSHION BEZEL | | | | ● | ● | ● | ● | ● |
| | 4-683-224-11 | & | CUSHION BEZEL | ● | ● | ● | | | | | |
| 1012 | 4-683-217-03 | | HOUSING BEZEL | | | | ● | ● | ● | ● | ● |
| | 4-683-217-11 | | HOUSING BEZEL | ● | ● | ● | | | | | |
| △ [MA] 1014 | 2-598-357-21 | | LABEL ID (J) | | | | ● | | | | |
| | 2-598-329-01 | | LABEL ID (JCTO) | ● | | | | | | | |
| | 2-598-329-11 | | LABEL ID (JCTO) | | | ● | | | | | |
| | 2-598-329-21 | | LABEL ID (JCTO) | | ● | | | | | | |
| | 2-598-563-01 | | LABEL ID (U) | | | | | | ● | | |
| | 2-598-563-11 | | LABEL ID (U) | | | | | ● | | | |
| | 2-598-563-21 | | LABEL ID (U) | | | | | | | ● | |
| △ [MA] | 2-598-563-31 | | LABEL ID (U) | | | | | | | | ● |
| 1016 | A-1101-121-A | $ | ASSY DISPLAY(S) | | | | ● | ● | ● | ● | ● |
| | A-1099-489-A | $ | ASSY DISPLAY SILVER(S) | ● | ● | ● | | | | | |
| 1021 | 1-400-255-11 | | FERRITE CORE | | | | | ● | ● | ● | ● |
| 1023 | 1-500-863-11 | | FERRITE CORE | | | | | ● | ● | ● | ● |
| | | | | | | | △ [MA] | | | | △ [MA] |

- This parts list contains two different types of parts.
  The first type is the parts that are common to all models.
  The other type is the parts that are different depending on each model.

- この部品表は，機種共通の部品と，機種によって使い分けが必要な部品に分かれています。

Sony Confidential

VGN-S53B/S63PZ/S73PB/S93PS/S93PSY/S93S (J)
VGN-S430P/S450FP/S460/S460F/S460P/S470P/S480/S480B/S480BH/S480P (AM)
VGN-S4HP/S4HRP/S4M/S4VP/S4XP/S4XRP/S4Z (EU)
VGN-S43LP/S44TP/S45C/S45CP/S45LP/S45SP/S46C/S46CP/S46GP/S46TP/S47LP/S47SP/S48CP/S48GP/S48TP/S49CP (AO)

4-13

# A-1. Accessories

**2001**
**AC Adaptor**

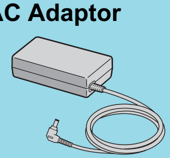

△1 [MA] → **2009**
**Power-supply Cord**

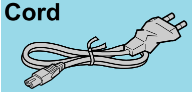

△1 [MA] → **2015**
**Power Cord**

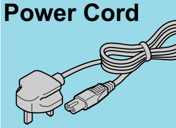

**2003**
**Battery**

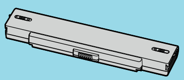

△5 [MA] → **2011**
**Power-supply Cord**

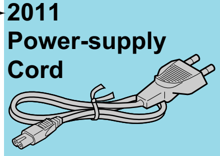

**2016**
**Power Cord**

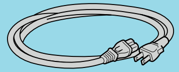

**2004**
**L Battery**

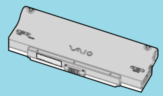

△1 [MA] → **2012**
**Power-supply Cord**

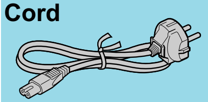

**2017**
~~**Power Cord**~~ ← △4 [CHG] **Power-supply Cord**

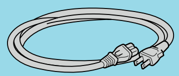

△2 [MA] → **2006**
**Power Cord**

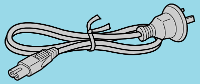

△2 [MA] → **2013**
**Power-supply Cord Set**

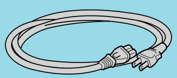

△2 [MA] → **2018**
**Power Cord**

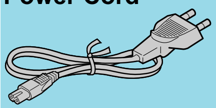

**2007**
**Power Cord**

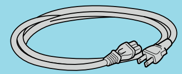

△2 [MA] → **2014**
**Power Cord**

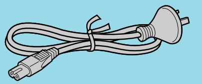

| | | | | | | J | | | | | | AM | | | | | | | | | | EU | | | | | | | AO | | | | | | | | | | | | | | | | | |
|---|---|---|---|---|---|---|---|---|---|---|---|---|---|---|---|---|---|---|---|---|---|---|---|---|---|---|---|---|---|---|---|---|---|---|---|---|---|---|---|---|---|---|---|---|---|---|
| Mark | Ref.No. | Part No. | $ | & | Description | S73PB/B | S53B/S | S93PS/S* | S93PSY* | S93S/S* | S63PZ/B | S460P/B | S470P/S | S460/B | S480* | S480P* | S480B* | S480BH* | S430P/S | S460F | S450FP | S4XP/B | S4VP/B | S4HP/B | S4HRP/B | S4M/S | S4XRP/B | S4Z/S | S49CP/B | S48CP/B | S46CP/B | S46CP/S | S46C/B | S46C/S | S45CP/S | S45C/S | S48GP/B | S48TP/B | S47SP/B | S47LP/B | S46GP/S | S46TP/S | S45SP/S | S45LP/S | S44TP/B | S43LP/S |
| △4 [CHG] | ~~⚠ 2001~~ | ~~1-479-114-23~~ | ~~$~~ | ~~&~~ | ~~ADAPTOR, AC~~ |||||||●|●|●|●|●|●||●|||||||||||||||||||||||||||||
| △1 [MA] | ⚠ 2001 | 1-479-231-11 | $ | & | ADAPTOR, AC |||||||||||||||||||||●||●||||||||||||||||||||
| | ⚠ | 1-479-116-21 | $ | & | AC ADAPTOR |●|●|●|●|●|●|||||||||||||||||||||||||||||||||||
| △1 [MA] | ⚠ | 1-479-114-31 | $ | & | ADAPTOR, AC (△4 [CHG]) |||||||●|●|●|●|●|●|●|●|●|●|●|●|●||●||●|●|●|●|●|●|●|●|●|●|●|●|●|●|●|●|●|●|●|
| | ⚠ 2003 | A-1072-505-A | $ | & | BATTERY PACK BPS2 (J) (S) |●|●|●|●|●|●|||||||||||||||||||||||||||||||||||
| | ⚠ | A-1072-506-A | $ | & | BATTERY PACK BPS2 (U) (S) |||||||●|●|●|●|●|●|●|●|||||||||||||||||||||||||||
| | ⚠ | A-1072-507-A | $ | & | BATTERY PACK BPS2 (E/I) (S) |||||||||||||||●|●|●|●|●|●|●|●|●|●|●|●|●|●|●|●|●|●|●|●|●|●|●|●|●|●|●|
| | ⚠ 2004 | A-1072-508-A | $ | & | BATTERY PACK BPL2 (J) (S) |||●|●|●||||||||||||||||||||||||||||||||||||
| | ⚠ | A-1072-509-A | $ | & | BATTERY PACK BPL2 (U) (S) ||||||||||●|●|●|●||||||||||||||||||||||||||||
| △2 [MA] | ⚠ 2006 | 1-555-074-32 | | & | CORD, POWER ||||||||||||||||||||||||||||||||●||||●|||||
| | ⚠ 2007 | 1-829-237-21 | | & | CORD, POWER |||||||●|●|●|●|●|●|●|●|●|●|||||||||||||||||||||||||
| △1 [MA] | ⚠ 2009 | 1-827-481-21 | | & | POWER-SUPPLY CORD |||||||||||||||||●|●|●||●|||||||||||||●||||●|||
| △5 [MA] | ⚠ 2011 | 1-823-947-32 | | & | POWER-SUPPLY CORD |||||||||||||||||||||||||||||||||||●||||●||●|
| △1 [MA] | ⚠ 2012 | 1-830-375-11 | | & | POWER-SUPPLY CORD |||||||||||||||||||●||●||||||||||||||||||||
| △2 [MA] | ⚠ 2013 | 1-830-518-21 | | & | POWER-SUPPLY CORD SET |||||||||||||||||||||||||||||||||●||||●|||●||
| △2 [MA] | ⚠ 2014 | 1-827-945-21 | | & | CORD, POWER ||||||||||||||||||||||||||||||||●|||||||||
| △1 [MA] | ⚠ 2015 | 1-827-946-31 | | & | CORD, POWER |||||||||||||||||●|●|●||●||●||||||||||||||||||
| △2 [MA] | ⚠ 2016 | 1-827-947-21 | | & | CORD, POWER ||||||||||||||||||||||||●|●|●|●|●|●|●|●|||||||||||
| △4 [CHG] | ⚠ 2017 | 1-827-160-21 | | & | POWER-SUPPLY CORD |●|●|●|●|●|●|||||||||||||||||||||||||||||||||||
| △2 [MA] | ⚠ 2018 | 1-824-910-41 | | & | CORD, POWER ||||||||||||||||||||||||||||||||●||||●|||||
| △1 [MA] | - | 1-816-429-12 | | | (UK)...PHONE PLUG (GB) |||||||||||||||||●|●|●||●||●||||||||||||||||||
| | - | 2-629-486-01 | | & | Instruction Manual (XP Professional,XP Home Edition) |●|●|●|●|●||||||||||||||||||||||||||||||||||||
| △3 [MA] | - | 2-629-487-01 | | & | Instruction Manual (XP Professional) ||||||●|||||||||||||||||||||||||||||||||||
| △1 [MA] | - | 2-629-976-11 | | | (UK/Swiss/Dutch/Belgium/Swedish/Portugal)...HW SPECS |||||||||||||||||●|●|●||●||●||||||||||||||||||
| △1 [MA] | - | 2-629-976-21 | | | (Swiss/German)...HW SPECS |||||||||||||||||●|●|●||●|||||||||||||||||||||
| △1 [MA] | - | 2-629-976-31 | | | (Swiss/French/Belgium)...HW SPECS |||||||||||||||||●|●|●||●|||||||||||||||||||||
| △1 [MA] | - | 2-629-976-41 | | | (Italian)...HW SPECS |||||||||||||||||●|●|●||●|||||||||||||||||||||
| △1 [MA] | - | 2-629-976-51 | | | (Swedish)...HW SPECS |||||||||||||||||●||●||●|||||||||||||||||||||
| △1 [MA] | - | 2-629-976-61 | | | (Duthch/Belgium)...HW SPECS |||||||||||||||||||●||||||||||||||||||||||
| △1 [MA] | - | 2-629-976-71 | | | (Portugal)...HW SPECS |||||||||||||||||||●||||||||||||||||||||||
| △1 [MA] | - | 2-629-976-81 | | | (Swedish)...HW SPECS |||||||||||||||||||●||||||||||||||||||||||
| △1 [MA] | - | 2-629-976-91 | | | (Swedish)...HW SPECS |||||||||||||||||||●||||||||||||||||||||||
| △1 [MA] | - | 2-629-977-11 | | | (UK)...HW SPECS |||||||||||||||||||●||||||||||||||||||||||
| △1 [MA] | - | 2-629-977-21 | | | (UK)...HW SPECS |||||||||||||||||||●||||||||||||||||||||||
| △1 [MA] | - | 2-629-978-11 | | | (Russian)...HW SPECS |||||||||||||||||||||●||●||||||||||||||||||||
| △1 [MA] | - | 2-584-870-01 | | | TROUBLE GUIDE (D) |||||||||||||||||●|●|●|●|●|●|||||||||||||||||||
| △1 [MA] | - | 2-584-870-11 | | | TROUBLE GUIDE (D) |||||||||||||||||||●|●||●|||||||||||||||||||
| △1 [MA] | - | 2-584-871-11 | | | RECOVERY GUIDE (D) |||||||||||||||||||●|●||●|||||||||||||||||||
| △1 [MA] | - | 2-634-933-01 | | | (Russian)...REGULATORY BOOKLET RUS (JDS) |||||||||||||||||||||●||●||||||||||||||||||||
| △1 [MA] | - | 2-632-233-01 | | | REGULATORY BOOKLET(JDS) |||||||||||||||||●|●|●|●|●|●|||||||||||||||||||
| △2 [MA] | - | 2-633-274-11 | | | SAFETY/REGULATIONS GUIDE 1(D) ||||||||||||||||||||||||||||||||●|●|●|●|●|●|●|●|●|●|
| △2 [MA] | - | 2-633-274-21 | | | SAFETY/REGULATIONS GUIDE 1(D) ||||||||||||||||||||||||●|●|●|●|●|●|●|●|||||||||||
| △2 [MA] | - | 2-629-243-11 | | | SPEC SHEET ||||||||||||||||||||||||||||||||●||●||●||●||||
| △5 [MA] | - | 2-629-243-21 | | | SPEC SHEET |||||||||||||||||||||||||||||||||||●||||●||●|
| △2 [MA] | - | 2-629-243-31 | | | SPEC SHEET ||||||||||||||||||||||||●|●|●|●|●|●|●|●|||||||||||
| △2 [MA] | - | 2-629-243-41 | | | SPEC SHEET |||||||||||||||||||||||||||||||||●||||●|||●||
| △2 [MA] | - | 2-631-104-11 | | | TROUBLESHOOTING GUIDE ||||||||||||||||||||||||||||||||●||●||●||●||||
| △5 [MA] | - | 2-631-104-21 | | | TROUBLESHOOTING GUIDE |||||||||||||||||||||||||||||||||||●||||●||●|
| △2 [MA] | - | 2-631-104-31 | | | TROUBLESHOOTING GUIDE ||||||||||||||||||||||||●|●|●|●|●|●|●|●|||||||||||
| △2 [MA] | - | 2-631-104-41 | | | TROUBLESHOOTING GUIDE |||||||||||||||||||||||||||||||||●||||●|||●||
| | - | 2-632-904-11 | | | LEGAL SAFETY(U) (D) |||||||●|●|●|||||●|●|●||||||||||||||||||||||||||
| | - | 2-632-903-11 | | | WELCOME MAT(U) (D) |||||||●|●|●|||||●|●|●||||||||||||||||||||||||||
| △2 [MA] | - | 2-631-664-01 | | | EULA (TH) (JDS) ||||||||||||||||||||||||||||||||||●||||●||||
| △4 [ADD] | - | 2-632-903-21 | | | WELCOME MAT(U) (D) ||||||||||●|||●||||||||||||||||||||||||||||||
| △4 [ADD] | - | 2-632-903-31 | | | WELCOME MAT(U) (D) |||||||||||●|●|||||||||||||||||||||||||||||||
| △4 [ADD] | - | 2-632-904-21 | | | LEGAL SAFETY(U) (D) ||||||||||●|●|●|●||||||||||||||||||||||||||||
| | | | | | |||||||△3 [MA]|||||||||△6 [MA]||△1 [MA]|△1 [MA]|△1 [MA]|△1 [MA]|△1 [MA]|△1 [MA]|△1 [MA]|△1 [MA]|△5 [MA]|△2 [MA]|△2 [MA]|△2 [MA]|△2 [MA]|△2 [MA]|△2 [MA]|△2 [MA]|△2 [MA]|△2 [MA]|△2 [MA]|△2 [MA]|△5 [MA]|△2 [MA]|△2 [MA]|△2 [MA]|△5 [MA]|△3 [MA]|△5 [MA]|

- This parts list contains two different types of parts.
  The first type is the parts that are common to all models.
  The other type is the parts that are different depending on each model.

- この部品表は，機種共通の部品と，機種によって使い分けが必要な部品に分かれています。

Sony Confidential

# CHAPTER 5.
# OTHER

## 5-1. The Barcode Label

The hatched portion of the barcode is used as the repair data.

バーコードラベルの網掛け部は，修理データとして使用いたします。

[MBX-129 Board]
(Side A)

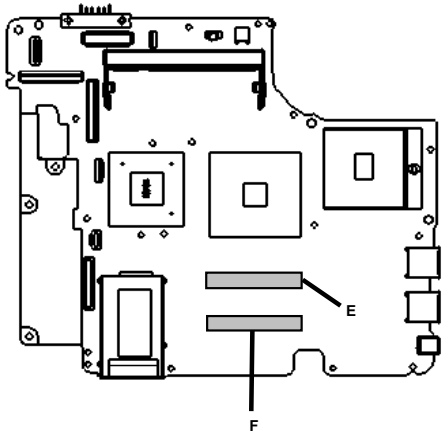


[MBX-129 Board]
(Side B)

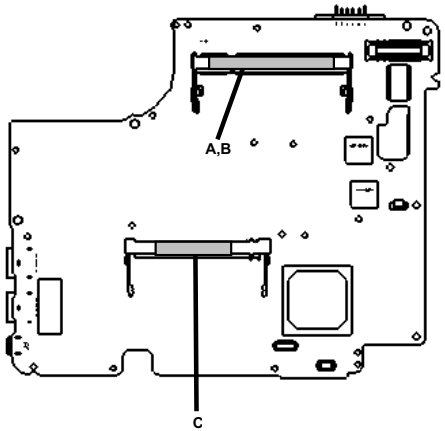


[Drive]
(Rear)

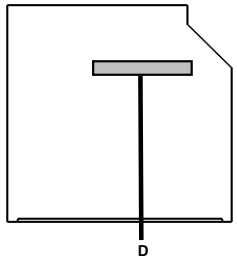


[HDD (FUJITSU)]
(Top)

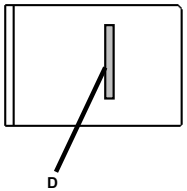


[W-LAN Card]
(Top)

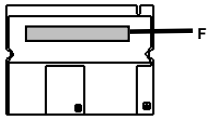


[HDD (HITACHI)]
(Top)

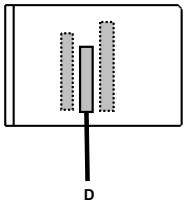


[LCD Unit]
(Rear)

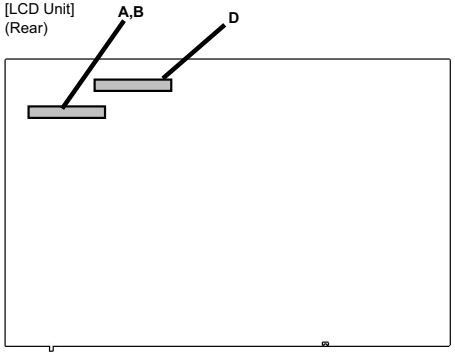


[Keyboard Unit]
(Rear)

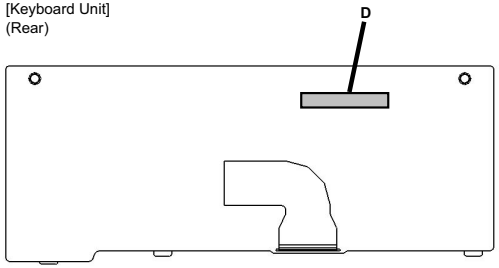


[W-LAN Card]
(Rear)

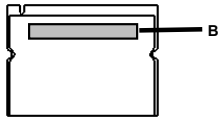


[MODEM Card]
(Rear)

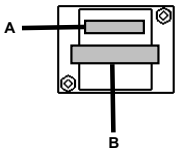


[Memory ]
(Top)

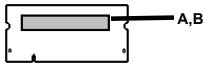


A : Part No.
B : Serial No.
C : Revision No.
D : Maker Barcode
E : Global User ID (iLink)
F : Mac Address

**Sony Confidential**

# 5-2. Replacing the CPU

Note: We have two kinds of CPU for this set, and either of them is used.
Two kinds of CPU have differences in the lock position and the unlock position.

## 1. Socket configuration 1

**1. How to remove the CPU**

① Rotate the lock with a flat-blade screwdriver toward the unlock position shown in the figure.
② Remove up the CPU.

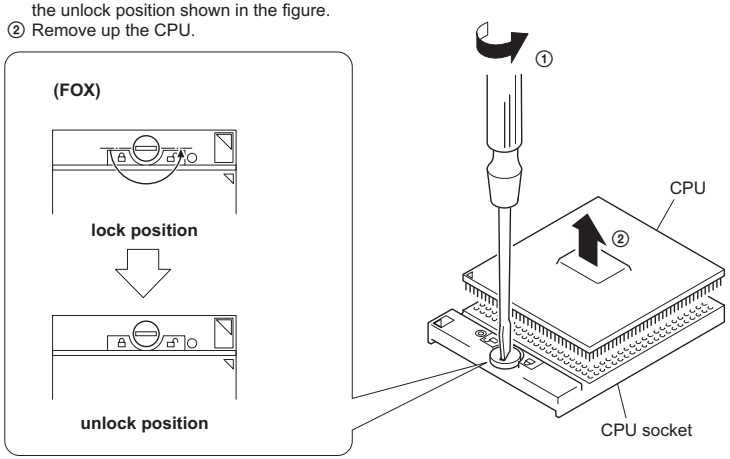


**2. How to install the CPU**

① Position the mark on the CPU to the mark on the CPU socket and put in all pins to the holes on the CPU socket.
② Pressing two corners marked with ◯ in the figure, rotate the lock with a flat-blade screwdriver toward the lock position.

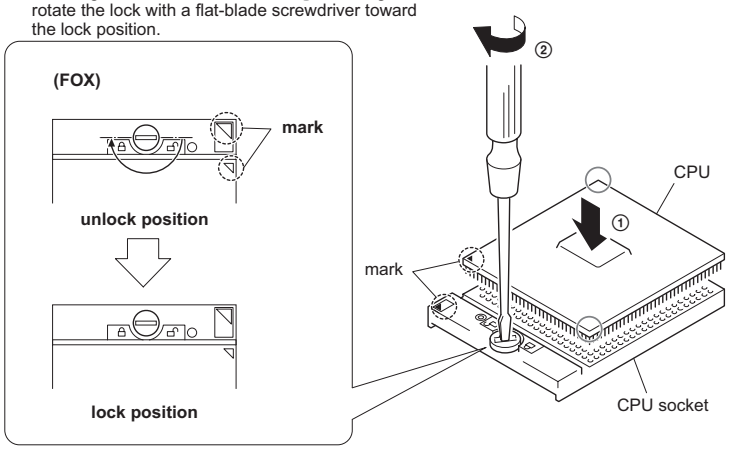


Note: Lock the CPU properly, or operation becomes unstable.

## 2. Socket configuration 2

**1. How to remove the CPU**

① Rotate the lock with a flat-blade screwdriver toward the unlock position shown in the figure.
② Remove up the CPU.

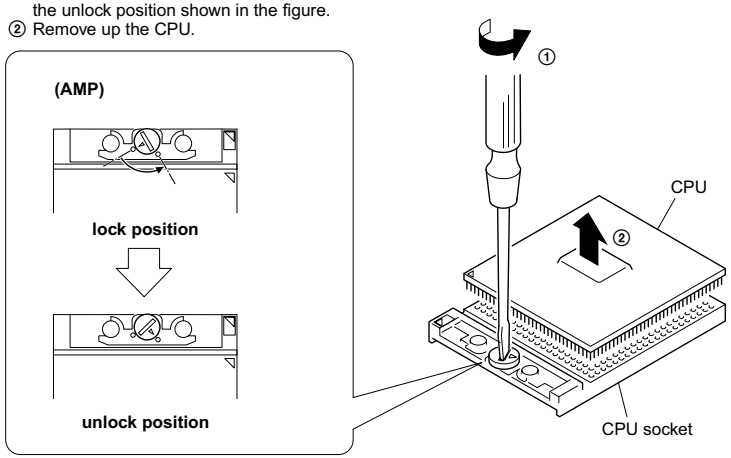


**2. How to install the CPU**

① Position the mark on the CPU to the mark on the CPU socket and put in all pins to the holes on the CPU socket.
② Pressing two corners marked with ◯ in the figure, rotate the lock with a flat-blade screwdriver toward the lock position.

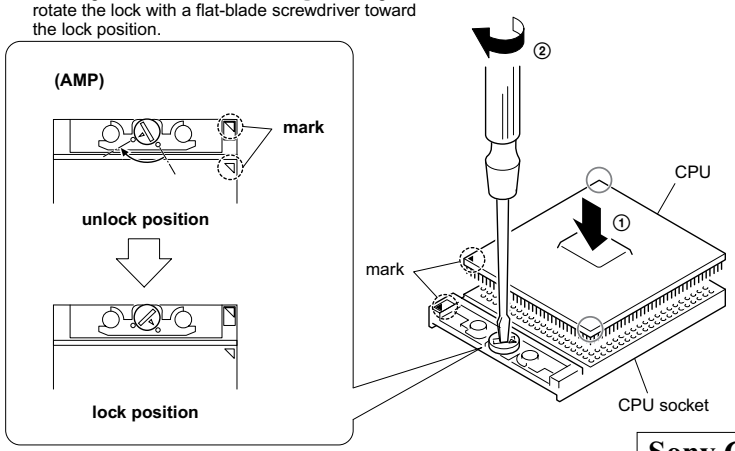


Note: Lock the CPU properly, or operation becomes unstable.

Sony Confidential

## List of VGN-S Series (As of November, 2005)

| Service Manual Part No. | Model Name | | | |
|---|---|---|---|---|
| | J | AM | EU | AO |
| 9-876-369-XX | VGN-S50B<br>VGN-S70B<br>VGN-S90PS*<br>VGN-S90S* | VGN-S150<br>VGN-S150F<br>VGN-S150FP<br>VGN-S150P<br>VGN-S170*<br>VGN-S170B*<br>VGN-S170F<br>VGN-S170P* | VGN-S1HP<br>VGN-S1VP<br>VGN-S1XP | VGN-S16C<br>VGN-S16GP<br>VGN-S16LP<br>VGN-S16SP<br>VGN-S16TP<br>VGN-S17C<br>VGN-S18CP<br>VGN-S18GP<br>VGN-S18LP<br>VGN-S18SP<br>VGN-S18TP |
| 9-876-391-XX | VGN-S51B<br>VGN-S61PZ<br>VGN-S71PB<br>VGN-S91PS*<br>VGN-S91S* | VGN-S240P<br>VGN-S250F<br>VGN-S250FP<br>VGN-S260<br>VGN-S260P<br>VGN-S270*<br>VGN-S270B*<br>VGN-S270F<br>VGN-S270P* | VGN-S2HP<br>VGN-S2HRP<br>VGN-S2VP<br>VGN-S2XP<br>VGN-S2XRP | VGN-S25C<br>VGN-S26C<br>VGN-S26GP<br>VGN-S26LP<br>VGN-S26SP<br>VGN-S26TP<br>VGN-S27C<br>VGN-S28CP<br>VGN-S28GP<br>VGN-S28LP<br>VGN-S28SP<br>VGN-S28TP |
| 9-876-402-XX | VGN-S52B/S<br>VGN-S62PS/S*<br>VGN-S62PSY*<br>VGN-S62S/S* | VGN-S350F<br>VGN-S350FP<br>VGN-S360<br>VGN-S360P<br>VGN-S370F | | VGN-S36GP/S<br>VGN-S36LP/S<br>VGN-S36SP/S<br>VGN-S36TP/S<br>VGN-S37C/B<br>VGN-S38CP/B |
| 9-876-403-XX | VGN-S72PB/B<br>VGN-S92PS/S*<br>VGN-S92PSY*<br>VGN-S92S/S* | VGN-S380*<br>VGN-S380B*<br>VGN-S380P* | VGN-S3HP<br>VGN-S3VP<br>VGN-S3XP | VGN-S38GP/B<br>VGN-S38LP/B<br>VGN-S38SP/B<br>VGN-S38TP/B |
| 9-876-417-XX | VGN-S53B/S<br>VGN-S63PZ/B<br>VGN-S73PB/B<br>VGN-S93PS/S*<br>VGN-S93PSY*<br>VGN-S93S/S* | VGN-S430P/S<br>VGN-S450FP<br>VGN-S460/B<br>VGN-S460F<br>VGN-S460P/B<br>VGN-S470P/S<br>VGN-S480*<br>VGN-S480B*<br>VGN-S480BH* ☜<br>VGN-S480P* | VGN-S4HP/B<br>VGN-S4HRP/B<br>VGN-S4M/S<br>VGN-S4VP/B<br>VGN-S4XP/B<br>VGN-S4XRP/B<br>VGN-S4Z/S | VGN-S43LP/S<br>VGN-S44TP/B<br>VGN-S45C/S<br>VGN-S45CP/S<br>VGN-S45LP/S<br>VGN-S45SP/S<br>VGN-S46C/B<br>VGN-S46C/S<br>VGN-S46CP/B<br>VGN-S46CP/S<br>VGN-S46GP/S<br>VGN-S46TP/S<br>VGN-S47LP/B<br>VGN-S47SP/B<br>VGN-S48CP/B<br>VGN-S48GP/B<br>VGN-S48TP/B<br>VGN-S49CP/B |

* : CTO Model
☜ : Additional Models

This manual and the constituent data may not be replicated, copied nor reprinted in whole or in part without prior written authorization of Sony Corporation.

本マニュアルの一部，または全部について，無断でデータの複製，複写，転載することを禁じます。

9-876-417-07

English/Japanese
2005K0500-1
© 2005 Sony Corporation
Published by Sony Corporation VBD VAIO-GS Division

# Revision History

| Suffix | Ver. | Date | Contents | QM No. |
|---|---|---|---|---|
| -01 | Ver. 1 | 2005.04.20 | First Edition | |
| -02 | Ver. 2 | 2005.05.20 | △1 Front Page (Model Lineup), Page 1-1 to 1-2, Page 4-1, Page 4-3, Page 4-5, Page 4-7, Page 4-11, Page 4-14, Back Cover | N2005_006AK |
| -03 | Ver. 3 | 2005.06.02 | △2 Front Page (Model Lineup), Page 1-2, Page 4-1 to 4-3, Page 4-5, Page 4-7, Page 4-9, Page 4-11, Page 4-14, Back Cover | N2005_014AK |
| -04 | Ver. 4 | 2005.06.16 | △3 Front Page (Model Lineup), Page 1-1 to 1-2, Page 4-1, Page 4-3, Page 4-5, Page 4-7, Page 4-9, Page 4-13 to 4-14, Back Cover | N2005_026AK |
| -05 | Ver. 5 | 2005.07.04 | △4 Page 4-3, Page 4-14 | N2005_032CK |
| -06 | Ver. 6 | 2005.07.14 | △5 Front Page (Model Lineup), Page 1-2, Page 4-1, Page 4-3, Page 4-5, Page 4-7, Page 4-9, Page 4-11, Page 4-14, Back Cover | N2005_041AK |
| -07 | Ver. 7 | 2005.11.07 | △6 Front Page (Model Lineup), Page 1-1, Page 4-1, Page 4-3, Page 4-5, Page 4-7, Page 4-9, Page 4-13 to 4-14, Back Cover | N2005_066AK |
| | | | | |

<Remarks>